1 Introduction

This document gives a brief overview of the "Adaptive Control Unit" system called ACU, of the parts it consists of and of how it works. It also gives a short introduction into its internal communication interface (USI). Understanding this interface allows to integrate additional special function modules and the ACU system into a power converter.

Figure 1 shows the implementation of the ACU system into a power converter. In chapter 11 some examples of practical application are shown.

2 General Description

The ACU is a modular digital control system for magnet power converters. It was developed to comply with the requirements of the existing GSI accelerator as well as with the demands of the future FAIR project. It consists of the following parts (see also Figure 2):

- 19´´ 3U frame with
  - Backplane 1
  - Backplane 2
  - Power Supply Module 1
  - Power Supply Module 2
  - Multifunction Module
  - First ADC Module for actual value (e.g. current signal)
  - Second ADC Module for actual value (e.g. field value or voltage signal)(if needed)
  - DCCT Card (if needed/required)
- Interlock & Control Module
- DCCT Head (if required)
- Firmware for standard application
- Configuration software for Windows-PC

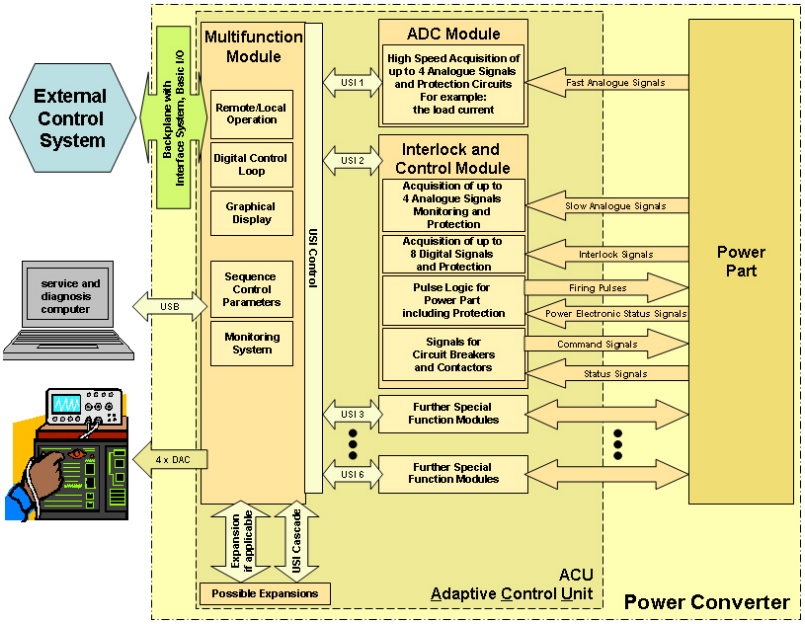

Figure 1: ACU in a power converter

The so called Multifunction Module is the heart of the system, framed by further specialized modules. This modular, FPGA based concept makes the entire system very versatile. All function specific parameters can be set or loaded through a local computer or an external accelerator control system. In either case the parameters can be written into a flash memory for long term configuration.

For manual operation there are several manual control elements and a graphical display on the front panel of the Multifunction Module. This display shows the graphical user interface (GUI) and it is also capable of displaying internal signals. There are four analogue outputs which can be configured to display various internal digital control signals on an external scope which is needful in the process of commissioning of power converters and finding optimized control parameters.

The components connected within an ACU system communicate by USI[1] (Universal Serial Interface). This interface allows for further expansions and is easy to implement. Because of the ASCII based protocol structure the communication diagnosis is very simple. The various components can work with different communication speeds. Therefore USI discerns slow access and fast access. Simple monitoring of supply voltages does not need the speed of fast data acquisition with fast ADCs. This applies for interlock signals, too. Up to eight slow access components or one fast access component can be connected to one USI port.

Through the installation of one or more ADC Modules it is possible to acquire fast analogue signals out of the power part with high precision for measuring and controlling purposes.

The Interlock & Control Module has inputs for up to 20 interlock signals. In the case of one or more active interlocks, the interlock trip line is interrupted. This forces the ACU into the interlock state with shut down of the power converter. Only after clearing of all interlocks, operation of the power converter continues. The Interlock & Control Module also translates the commands of the Multifunction Module to the power part and generates appropriate activating signals into the power part.

Every ACU system has its own power supplies. They provide the required voltages which are distributed over the two backplanes to the different boards.

The "Power Config Advanced" software allows configuring an ACU from a personal computer. The computer is connected via an USB cable to the Multifunction Module.

All parts of the ACU system (except the Interlock & Control Module) are mounted into a 19´´ frame with the height of 3U (Figure 2). This frame can be easily integrated into the cabinet of a power converter.

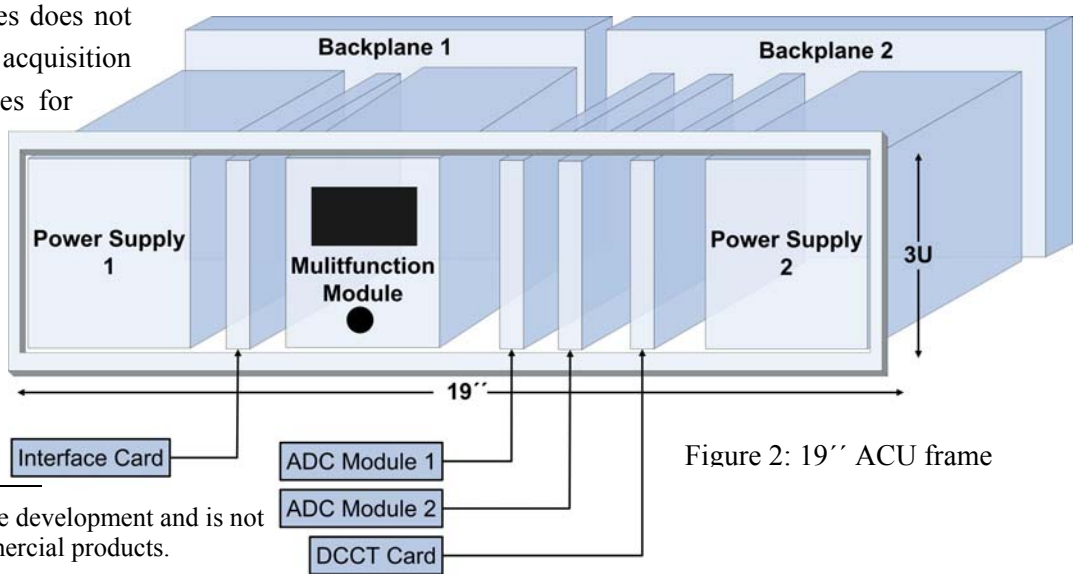

Figure 2: 19´´ ACU frame

[1] This interface is a GSI in house development and is not to be mixed up with other commercial products.

3 Multifunction Module

The Multifunction Module provides the user interface for manual operation, service and diagnosis by computer or oscilloscope. It also contains the communication ports to the external accelerator control system via the basic I/O-unit (Interface Card). Two independent control loops and the control topology of the power converter are also implemented in the Multifunction Module. A graphical display shows signals, information in plain text and the GUI. The Multifunction Module consists of two boards, the main-board and a front-board put on in 90° for manual operation and display. They are connected by a connection plug and through a ribbon cable.

3.1 Main-Board

On the Main Board (Figure 3) an Altera Cyclone II FPGA manages the communication with the Interface Card (Basic I/O unit) as well as the control of the power converter. An implemented NIOS II core handles the user interface on the graphical display of the front-board. The sequential

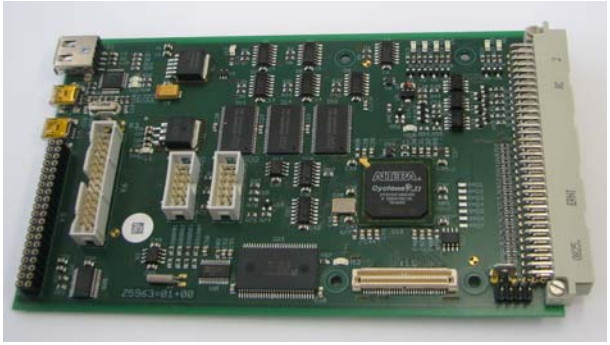

Figure 3: Main Board

control, the elements of the regulation loops, the multiplexer and other potentially critical tasks are implemented as logic arrays within the FPGA.
An extension interface (64 pin SMD jack on the main-board) is foreseen for further upgrades.

3.2 Front-Board

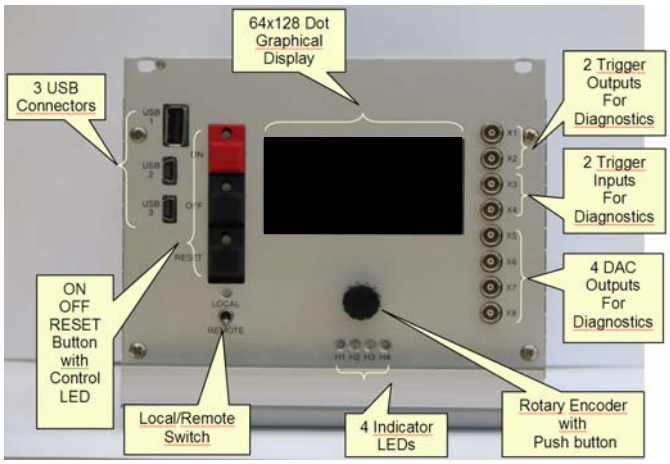

Figure 4: Front Board

To support local operation the Multifunction Module is equipped with a graphical display on its Front Board (Figure 4) with 64x128 pixels. Additionally there are the following manual control elements:

- On / Off / Reset buttons

- Local / Remote switch

  Switch to select local mode for operating with the manual control elements of the front-board or remote mode for operation by computer or an external control system.

- Incremental decoder ($^{+}/_{-}$) with push button

  This device is used for menu navigation and data input.

- Eight 1-pole Lemo jacks
  - 4 analogue DAC outputs. They can be configured manually or with a personal computer.
  - 2 digital inputs, such as triggers
  - 2 digital outputs, such as triggers

- Three USB ports

  They are defined as one host and two client ports.

  - USB port 1 (host) is used to plug in USB sticks for quick data transfer or for firmware updates.

  - USB port 2 (client) is an option for future upgrades. It is controlled by the Multifunction Module.

  - USB port 3 (client) connects the Multifunction Module to a computer running the program "Power Config Advanced" for controlling and configuration of the regulation loops and system parameters.

The assignment of digital signals to the DAC outputs can be selected per software or manually. They act as diagnostic outputs. At the time up to 15 different control signals are available:

- Input / output signals of both control loops (Set value, internal function generator or actual value)
- Output signals of controllers (proportional part, integral path, sum of both)
- Total deviation (with variable gain 1-1000)

The possibility to plug in a scope helps to configure the control parameters. The DACs have a resolution of 14 bit and a sampling rate of up to 250 kSPS.

4 Universal Serial Interface (USI)

The USI hardware (see Figure 5) is part of every module. The USI connects all components of an ACU system and allows communication between them. It supports asynchronous full-duplex communication with baud rates up to 20 MBit/s based on RS485.

Furthermore it contains module supply (24V / 500mA) and a hardware interlock trip line for immediately shut down of the power converter in case of malfunction. This interlock trip line is implemented as a *wired or*. One USI connection is done by a cable with RJ45 connectors and is galvanically isolated to guarantee that the connected modules are potential-free.

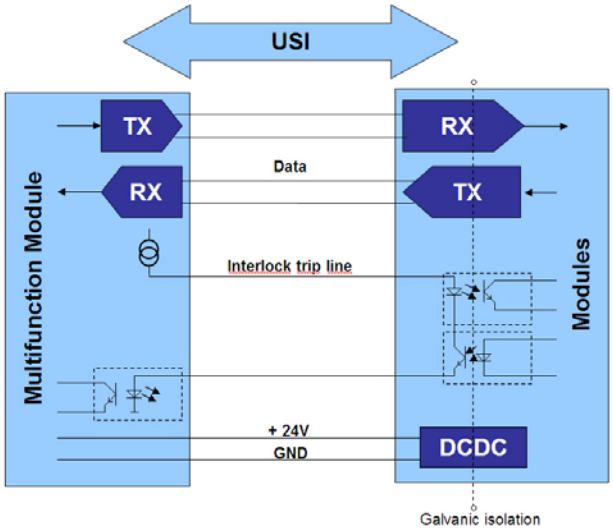

Figure 5: USI

USI can either connect all system modules to the host (Multifunction Module) or connect modules with each other. A combined star/bus (daisy chain) hierarchy is possible.

The USI signal propagation delay amounts about 4µs. The time between measuring with an ADC Module and updating the control voltage takes 12µs (converting time of ADC + 2 x USI transmission).

USI can operate in two modes, the Low Speed Mode and the High Speed Mode. In Low Speed Mode every USI port can handle up to 8 modules, enough resources for future upgrades. Every module connected via USI to the Multifunction Module identifies itself during an USI scan. After an USI scan the Multifunction Module knows the type and the speed mode (high or low speed) of the participant. This scan is accomplished at the boot sequence of the ACU. It also can be executed manually. In order to enable the Multifunction Module to identify and to handle new modules, every one of them has its own software driver. Once this driver is installed in the Multifunction Module the module will be identified correctly every time. In table 1 the most important USI parameters are listed.

4.1 Power Over USI

Two cores of the USI cable are used to supply other modules. A voltage of 24V and a maximal current of 500mA are provided. This voltage is fed over DCDC converters which provide the required local voltage of the supplied module.

4.2 Interlock Trip Line

By means of the interlock trip line every module connected to the Multifunction Module is capable of shutting down the power converter.
If any interlock in the hardware is detected, the line is interrupted by an optocoupler (see Figure 5) to notify the other modules of the error. The Interlock & Control Module has to shut down the power converter. This procedure works independently from firmware.
The interlock trip line is a series connection over the entire system and allows the detection of a cable break.

4.3 Communication

USI is a full duplex serial, ASCII based interface that manages the communication of the modules with the host (Multifunction Module). Commands or data as well as status information of the modules are sent and received over USI.
The USI is a purely master/slave interface. That means that no module can request information from the host. It is a RS485 interface that is galvanically isolated from the host.
On power on the baud rate is automatically set to 115,2kBaud with 8 bit, 1 stop bit and no parity bit. After this the host requests the maximum baud rate of the module. This rate is set by the host to enable communication at the maximum permissible speed. The possible baud rate is between 115,2kBaud and 20MBaud.

4.4 Plug & Play

USI is a plug & play interface. Every module can be plugged in any USI port on the host. The host identifies the module automatically on every power up. Thereafter it configures its internal data channel according to the assignment stored in the host.
In the case of multiple identical modules in one system the host needs a configuration file. This file is saved in a nonvolatile memory of the host. So the host can assign identical modules to different tasks.
To ensure this function every module needs to have its own set of registers and standard commands (MSP, FSP).

4.5 Connection

Standard CAT 5 network cables (1:1) with standard RJ45 connectors as cable terminals serve as connecting cables between the modules and the host.

USI baud rate	**max 20 MBit/s**
Modules per USI port	**max 8**
Power Over USI	**max 24V / 500mA**
τ_{prop} [1]	**< 4µs**
τ_{update} [2]	**~ 12µs**

[1] In high speed mode

[2] Time between acquiring a signal with the ADC Module and the update of the control voltage.

Table 1: USI parameters

5 ADC Module

The ADC Module (Figure 6) allows the acquisition of fast analogue signals from the power part, such as the load current, for control, protection and documentation purposes in high precision.
The ADC Module has a resolution of 18 bit and a sampling rate of up to 600kSPS.

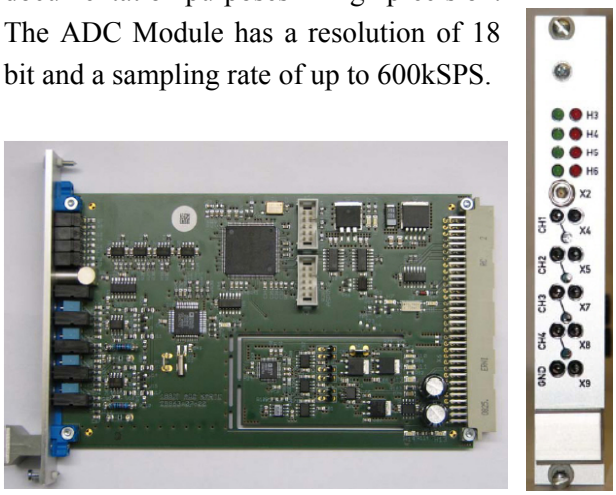

Figure 6: ADC Module

The main application is sampling of signals for control purposes. The digitized actual value is sent by USI to the Multifunction Unit for further processing. Additionally for monitoring and protection purposes the decoupled analogue signal is compared in four analogue comparator circuits with specified thresholds. So the maximum and minimum values, as well as the maximum and minimum average values can be monitored. The ADC Module is directly connected to the interlock trip line. If the signal exceeds a threshold, this causes an interlock. This is indicated by a red LED. The appropriate value is stored and can be requested by the Multifunction Module over USI.

6 Interlock & Control Module

The Interlock & Control Module fulfils three functions. It Generates the PWM, the command signals for the power part and it handles the interlock signals. The Interlock & Control Module also has a graphical display. As on the front board it shows the GUI and internal signals.

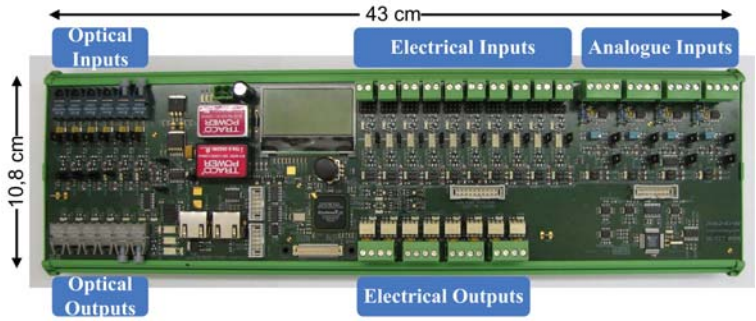

Figure 7: Interlock & Control Module

6.1 PWM

The 13 Bit PWM (pulse width modulator for IGBT circuits) of the Interlock & Control Module momentary supports the following hard switching topologies:

- 1 quadrant (chopper)
- 2 quadrant (half bridge)
- 4 quadrant (full bridge)

Each of the given topologies can have one DC-link[2] or a low voltage DC-link for flat-top operation and a high voltage DC-link for pulsed operation.

[2] Every DC-link is supplied by a 50Hz transformer and a diode rectifier.

6.2 Command Signals

Here the command signals and firing pulses for the power electronics of the power part are generated. The following control output ports are available in the control section:

- 8 Electrical switching outputs (Optocouplers)
  for circuit breakers and contactors.

- 6 Optical outputs
  for IGBT and thyristor drivers.

6.3 Interlock Section

The Interlock section of the Interlock & Control Module handles status and interlock signals and also slow analogue signals for protection purposes. There are different kinds of interlock input ports in the interlock section:

- 4 analogue interlock inputs
  Every channel has a comparator with an adjustable threshold level (-11V...+11V).

- 10 digital electric interlock inputs
  DC-isolated inputs for signals which do no need to be compared to thresholds,
  e.g. door switch.

- 6 digital optical interlock inputs
  for optical interlock signals, e.g. status signals of IGBT drivers.

7 Modules in preparation

Besides the already existing Modules there are more Modules in preparation. There will be a new Control Module for 12 pulse thyristor circuits, and a new Control Module for 12 pulse thyristor circuits with a parallel active Filter (see Figure 17). There will also be Modules for input port extension of the Interlock & Control Module and the new Control Modules. So the amount of I/O ports for any kind of signals (optical, electrical, and analogue) may be increased.

8 Power Supply Modules

Every ACU system has two power supply Modules. Power supply Module 1 provides ±15V +5V.
The other Module is a three-phase power supply unit developed in GSI. It provides ±24V / 1A and ±15V / 100mA.
The voltages are distributed over the two backplanes to the different boards.

9 Backplanes

There are two different Backplanes in the 19´´ 3U frame.

9.1 Backplane 1

The Multifunction Module (its mainboard) and the Interface Card[3] are put on Backplane 1, which also provides the power supply for the two components.
The 6 USI ports on Backplane 1 are the interfaces to the other modules of the system, like the ADC Module, the Interlock & Control Module and other special function modules. Every USI port can handle up to 8 modules.
Also the internal 16 bit parallel FAIR bus for communication between the interface card and the Multifunction Module is located on backplane 1.

[3] The Interface Card connects the ACU system with the accelerator control system.

9.2 Backplane 2

Two ADC Modules, one DCCT card and the power supply unit 2 are put on backplane 2. Two USI ports on backplane 2 connect the ADC Modules to the Multifunction Module via Backplane 1.

10 Firmware

Every type of Module has its own Firmware. For the installation of firmware an USB stick is plugged into the Front Panel of the Multifunction Module. The firmware is automatically applied to the modules of concern.

The firmware working within the Multifunction Module allows the use of the GUI. The standard screen (Figure 8) is showing basic information on the display of the Multifunction Module. Pushing the incremental decoder opens the menu structure of the Multifunction Module. Error codes can be checked, system parameters can be sent to or read from an USB stick and the types of the connected Modules can be displayed.

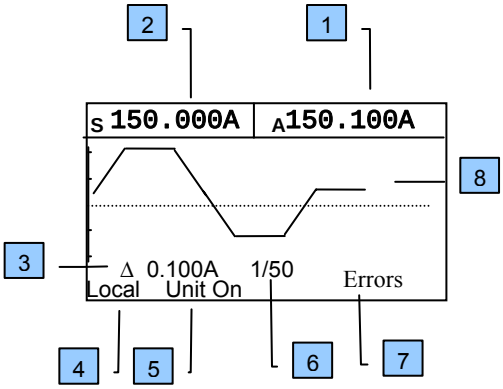

Figure 8: Standard screen of Multifunction Module

1 ○ Actual value of current
2 ○ Set value of current
3 ○ Total deviation of current
4 ○ Actual operation mode (local/remote)
5 ○ Actual state of power converter (on/off)
6 ○ Step size (relating to nominal value) for manual set value of current (local operation mode)
7 ○ If ´Errors´ is displayed, error codes are stored in the error menu.
8 ○ Graphical view of actual current

11 Power Config Advanced

Power Config Advanced[4] is a Windows based program that allows accessing the parameters of an ACU system comfortably with its GUI (see Figure 9). The computer running Power Config Advanced is connected to USB port 3 at the front panel. Now set values, control parameters, the basic parameters of the power converter sequence control (turn on, turn off, interlock) and charging time of the capacitors of the DC-link can be configured.

Every magnet power converter has its own configuration file (.pca). It contains all important information of the appropriate magnet and the ACU parameters.

[4] An English version will be available

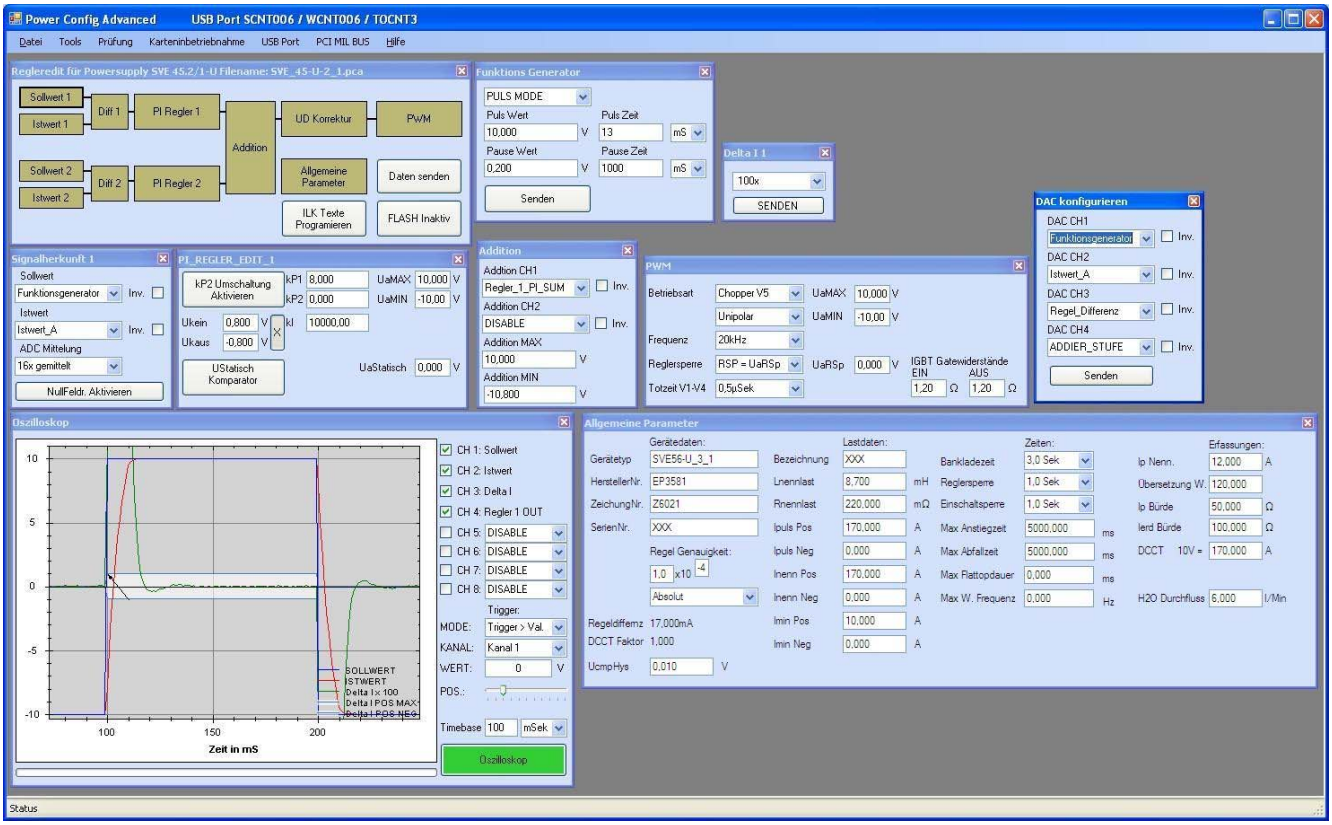

Figure 9: Power Config Advanced

An internal scope (Figure 10) and the integrated function generator (Figure 11) are helpful to adjust the parameters of the regulation loop (Figure 12) and allow easy documentation of signals.

Power Config Advanced is able to generate a commissioning protocol in form of a pdf document.

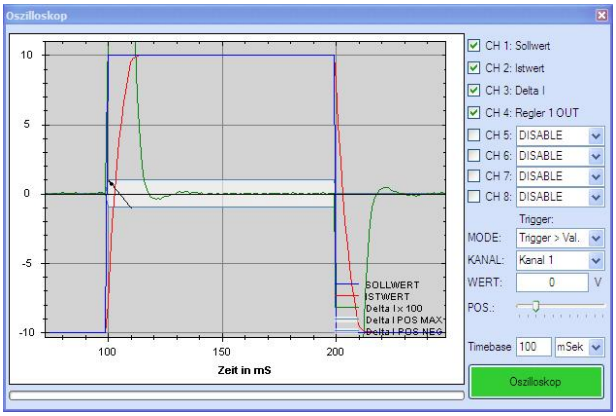

Figure 10: Internal scope

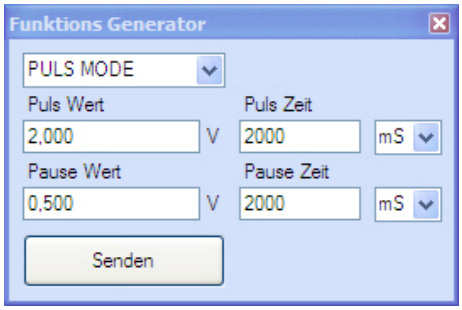

Figure 11: Function generator

The two entirely independent PI controllers can be connected as parallel or cascaded loops. They can be used either for current or for field control. A cascaded voltage control loop is possible. Figure 12 is showing the parameters which are accessible by software. The input signals of the regulation loops are selectable by software (see right window of Figure 12). There are also adjustable limits for controller outputs and an adjustable input threshold to force the integrator output to zero.

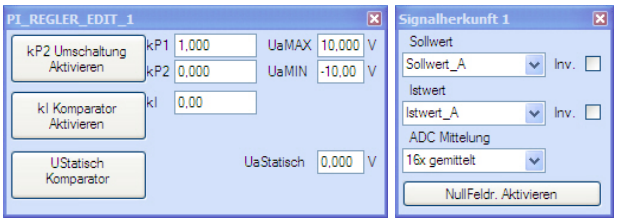

Figure 12: Regulation loop parameters

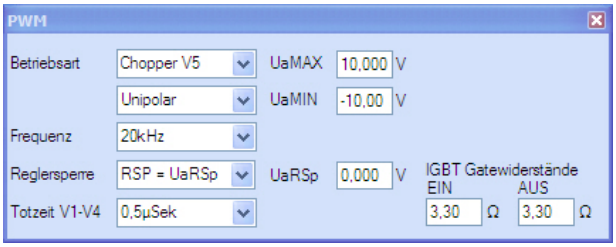

Figure 13: PWM parameters

Figure 13 shows the accessible PWM parameters. The PWM supports the topologies described in chapter 6: Interlock & Control Module. The required configuration can be set with the menu PWM shown in Figure 13.

The adjustable resulting output switching frequency can be set to[5] 20 kHz or 40 kHz. In case of 2 and 4 quadrant topologies the resulting switching frequencies for the single IGBTs are half the output switching frequency. To avoid a short circuit in one leg of a full or half bridge an adjustable turn on delay for the IGBTs can be set in the PWM menu.

[5] Those are the momentary implemented switching frequencies. The implementation of other frequencies is possible.

12 Applications

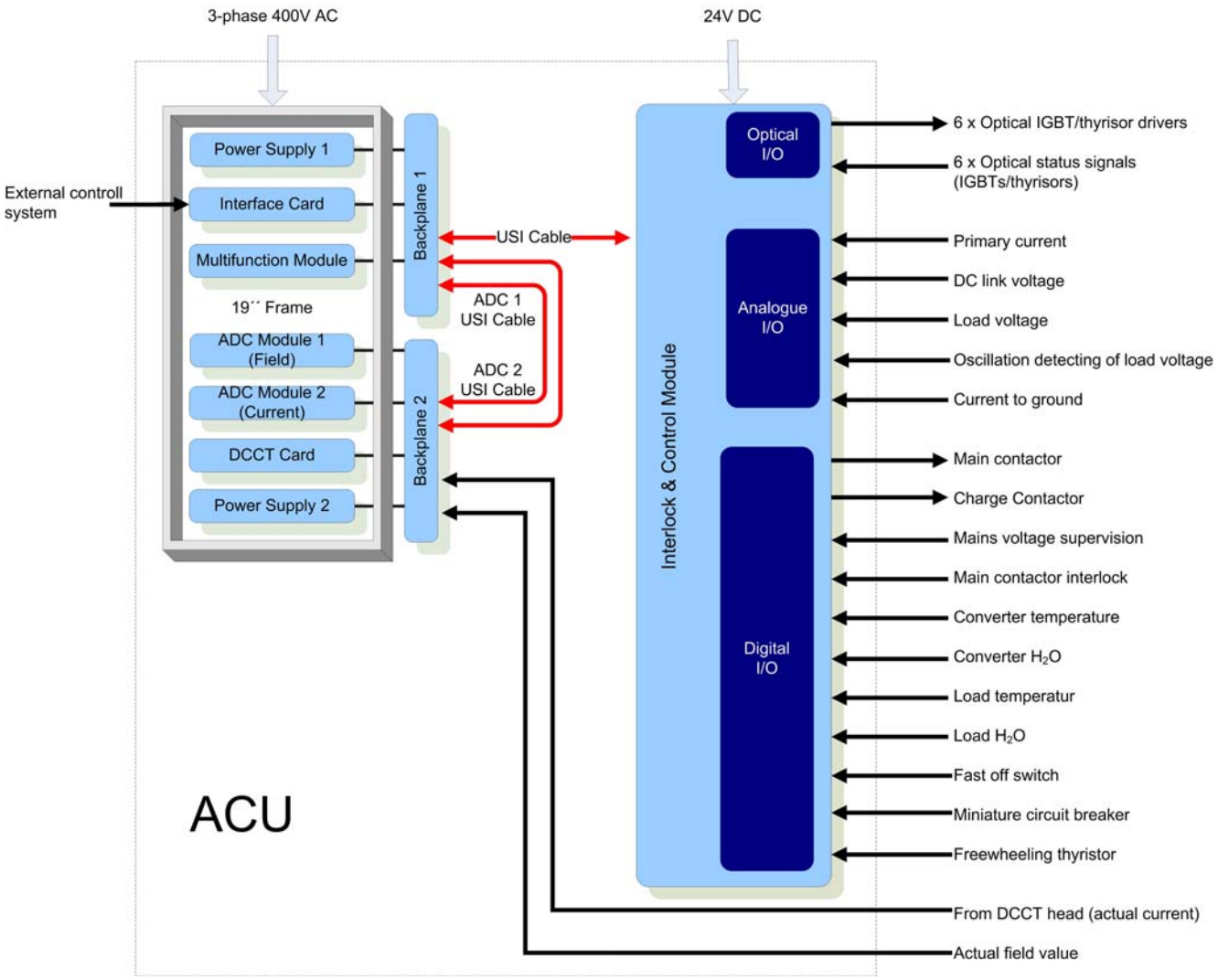

Figure 14: Typical ACU application as running in GSI

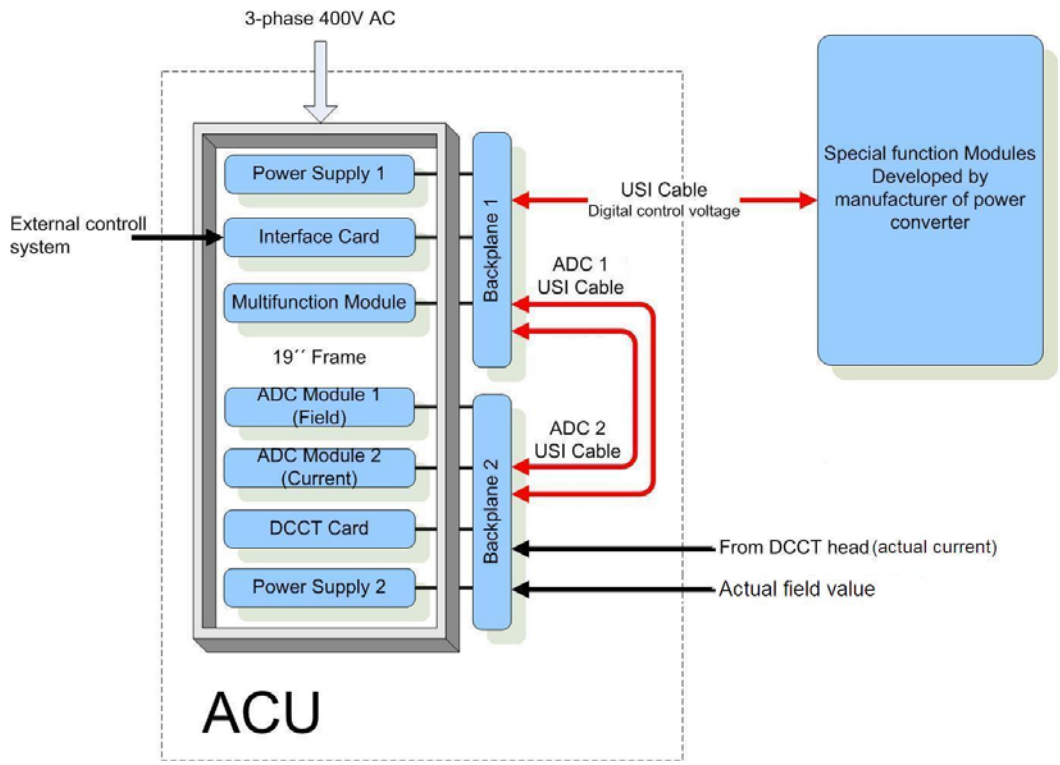

Figure 15: Minimal possible application with special modules developed by the manufacturer of the power part

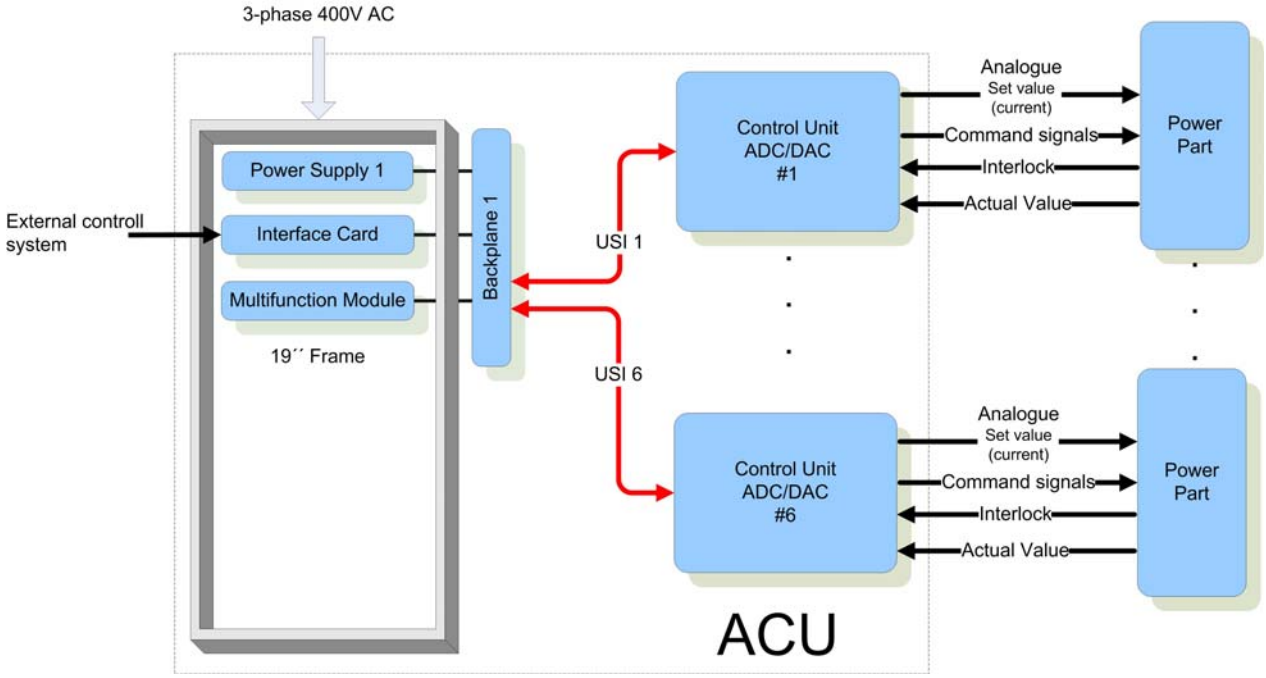

Figure 16: One Multifunction Module can supply up to six power converters with analogue

current regulation. (The Control Unit (ADC/DAC) is in work)

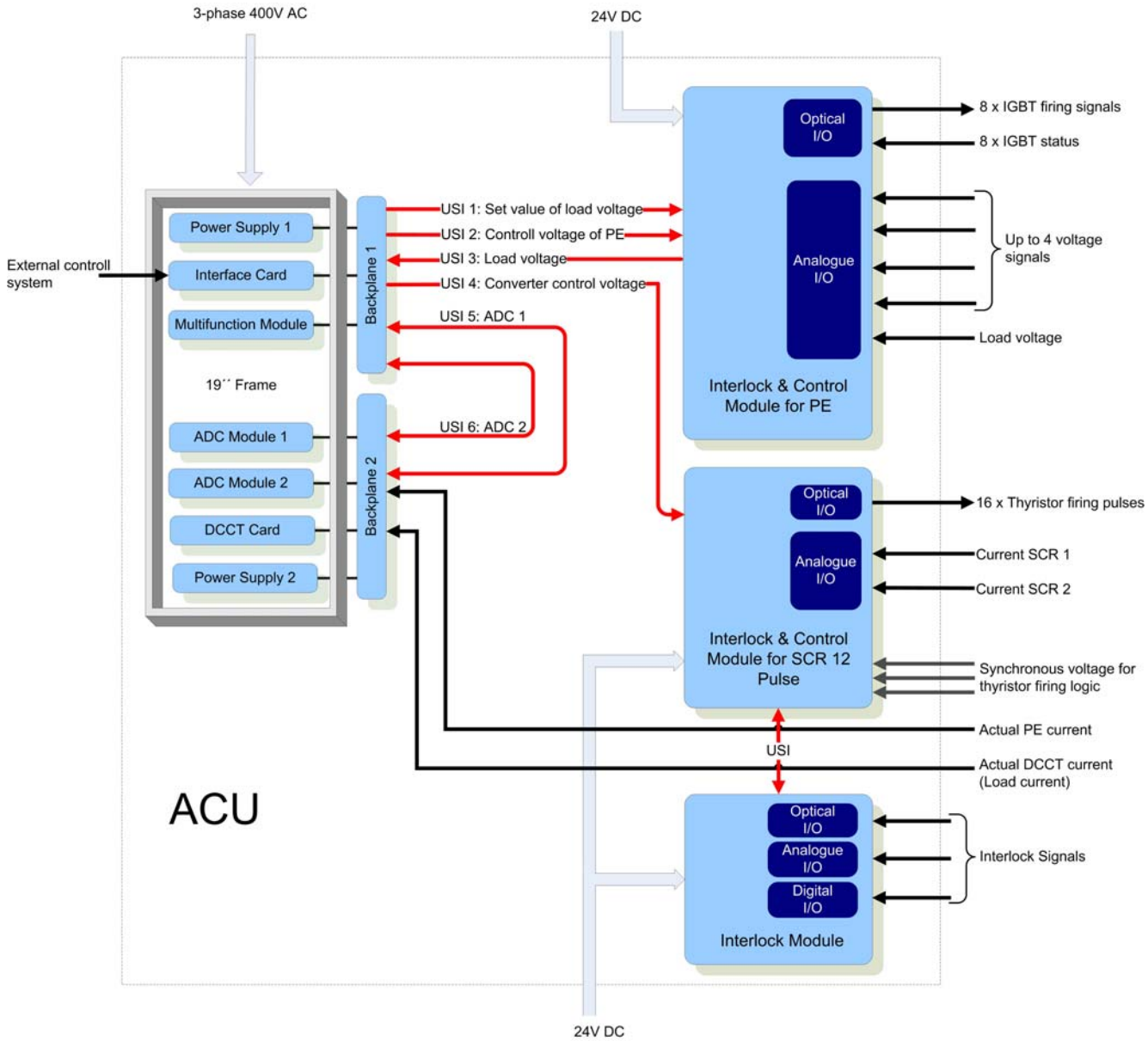

Figure 17: Planned application with special Control & Interlock Modules for 12 pulse thyristor circuits with parallel active filter unit (PE)

13 Actual Module Versions

Multifunction Module Main Board	FG660_012
Multifunction Module Front Board	FG660_021
Interlock & Control Module	FG660_051
Backplane 1	FG660_032
Backplane 2	FG660_070
ADC Module	FG660_041
Power Supply Module	FG660_050, FG660_060