Data Acquisition Backbone Core

Jörn Adamczewski, Hans G.Essel, Nikolaus Kurz, Sergey Linev
GSI, Experiment Electronics: Data Processing group

Work supported by EU RP6 project JRA1 FutureDAQ RII3-CT-2004-506078

Motivation for DABC

2004 → EU RP6 project JRA1 FutureDAQ*
2004 → CBM FutureDAQ for FAIR

Intermediate demonstrator

1996 → MBS future
50 installations at GSI,
50 external
http://daq.gsi.de

Requirements
- build events over fast networks
- handle triggered or self-trigger front-ends
- process time stamped data streams
- provide data flow control (to front-ends)
- connect (nearly) any front-ends
- provide interfaces to plug in application codes
- connect MBS readout or collector nodes
- be controllable by several controls frameworks

Use cases
- Detector tests
- FE equipment tests
- Data transport
- Time distribution
- Switched event building
- Software evaluation
- MBS event builder
- General purpose DAQ

Data
Acquisition
Backbone
Core

* RII3-CT-2004-506078

CBM DAQ features summary

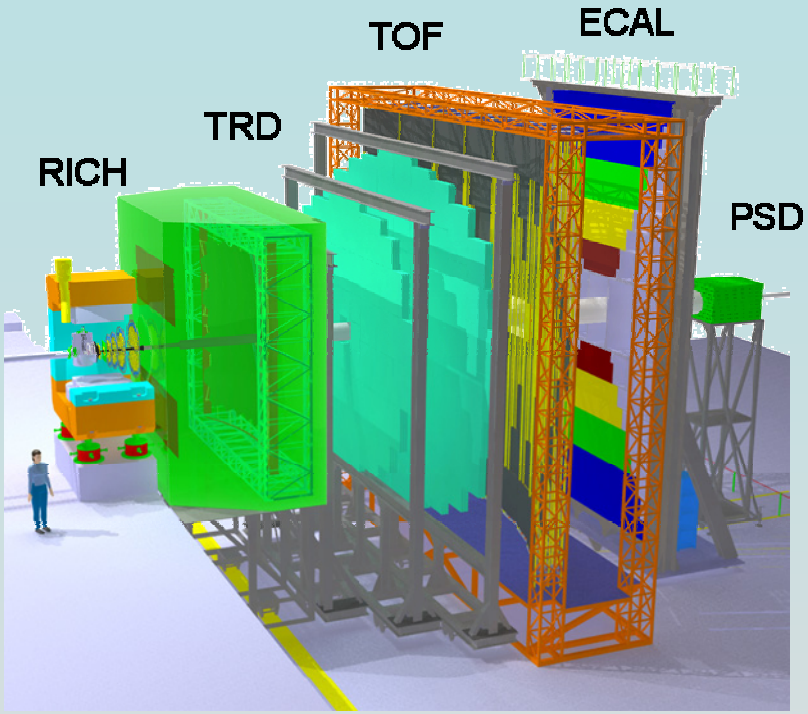

Complex trigger algorithms on full data:

- ⇒ **Self-triggered front-end electronics.**
- ⇒ **Time stamped data channels.**
- ⇒ **Transport full data into filter farm.**
- ⇒ **Data sorting over switched network on full data rate of ~1TB/s.**
- ⇒ **Sorting network: ~1000 nodes.**

Is that possible (in 2012)?

Data flow principle

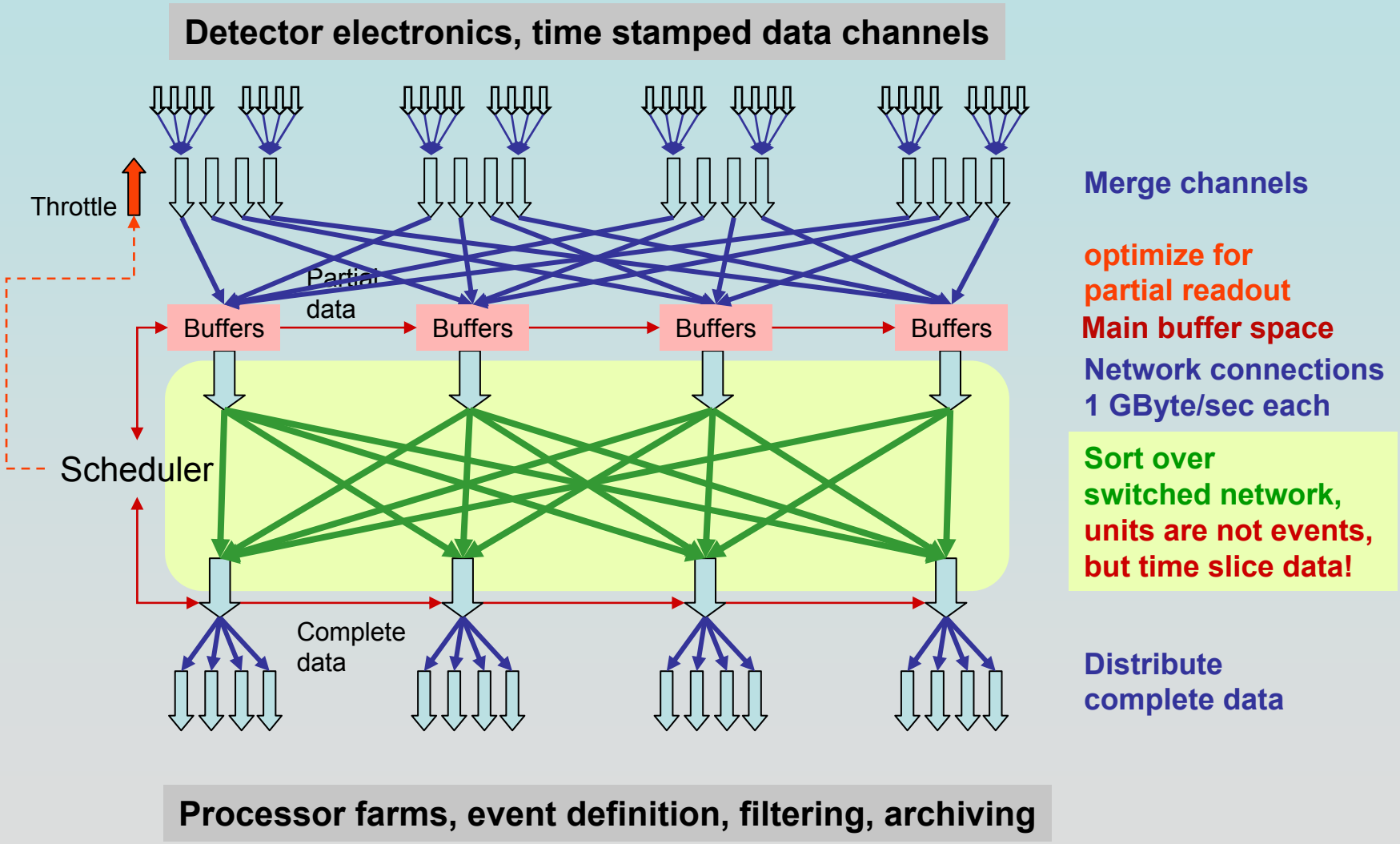

Software packages developed:

1. 2005 Simulation with SystemC (flow control, scheduling)
   - Meta data on data network

2. 2006 Real dataflow core (round robin, with/without sychronization)
   - Linux, InfiniBand, GB Ethernet
   - Simulates data sources

3. **2007- 8 Data Acquisition Backbone Core DABC (includes dataflow core)**
   - **Controls, Configuration, Monitoring, GUI ...**
   - **Real data sources**
   - **General purpose DAQ framework**

4. **2009 Applications**
   - **Standard library for CBM Readout controller**
   - **DAQ for CBM test beams 2008 / 2009**

Resources and time

- People of data processing group
  H.G.Essel
  J.Adamczewski (2009 8 month absent)
  S.Linev
- People of controls group
  maybe one FTE
- People from CBM
  hopefully

- **CBM required in 2008 a data taking system**
  Start with small system, grow on demand
  Preliminary controls
- **NUSTAR ?**
  In discussion
- **MBS** a first test bed: FOPI

Presentations

Release DABC v1.0	Given at 16th **IEEE NPSS RT09** May, Beijing (Paper)
DABC v1.0	Given at **CHEP 2009** Prague, Mar, 2009
DABC v1.0	Poster at **CHEP 2009** Prague, Mar, 2009
DABC v1.0	Given at **CBM** collaboration meeting GSI, Mar, 2009
DABC v1.0	Given at **CBM** DAQ workshop GSI, Dec, 2008
DABC	Poster at **Nuclear Science** Symposium Dresden, Oct 2008
Infiniband	Given at **Nuclear Science** Symposium Dresden, Oct 2008
DABC	Given at **NUSTAR** DAQ meeting Ljubljana, May 2008
Infiniband	Given at **DPG** Darmstadt, Mar, 2008
DABC	Given at **DPG** Darmstadt, Mar, 2008
DABC design	Given at **CBM** collaboration meeting GSI, Feb, 2008
DABC/MBS	Given at **CBM** collaboration meeting GSI, Feb, 2008
DABC	Given at **NUSTAR** DAQ meeting KVI Groningen, Dec. 2007
DABC	Poster from **CHEP07** Victoria, Sep, 2007 (Paper)
DABC	Given at **NUSTAR** DAQ meeting Huelva, Jul 19, 2007
DABC	Poster at 15th **IEEE NPSS RT07** May, Fermilab (Paper)
xDAQ	Given at **CBM** collaboration meeting GSI, Mar 1, 2007
InfiniBand	Given at **CBM** collaboration meeting GSI, Mar 1, 2007
DABC	Given at **CBM** collaboration meeting GSI, Feb 28, 2007
DABC	Given at **NUSTAR** DAQ meeting Legnaro, Jan 22, 2007
FutureDAQ	Given at **CHEP06** Mumbai, Feb, 2006 (Paper)
FutureDAQ	Given at 14th **IEEE NPSS RT05** June, Stockholm (Paper)

Publications

DABC v1.0	Paper submitted **IEEE NPSS realtime** conference Beijing May 2009
DABC v1.0	Paper submitted from **CHEP09** Prague, Mar, 2009
DABC	Paper from **CHEP07** Victoria, Sep, 2007
DABC	Conference record **IEEE NPSS realtime** conference Fermilab May 2007
FutureDAQ	Paper from **CHEP06** Mumbai, Feb, 2006
FutureDAQ	Conference record **IEEE NPSS realtime** conference Stockholm May 2005

Download via dabc.gsi.de

- DABC
  - Controls
    - Slim
    - DIM*
  - Java GUI*
  - Core
  - Plugins
    - bnet-mbs
    - mbs
    - ROC*
    - ABB*
    - ROOT
    - verbs
  - Applications
    - bnet-mbs
    - mbs
    - ROC
    - ABB
    - bnet-test
    - core-test
    - net-test

Plugins: Implementation of applications (programmers)
Applications: Mainly setup or testing programs (users)

* external packages needed

DABC Controls and Monitoring

DabcMbsController

OK: all running

Name server:	lxg0523.gsi.de
User name:	goofy
Password [RET]:	
MBS master node:	R3g-7
MBS servers:	3
DABC master node:	lxi009
DABC master name:	Control
DABC servers:	1
MBS system path:	/daq/usr/goofy/mbswork/v5 1
MBS user path:	dabc/mbs2
MBS Startup:	startup.scom
MBS Shutdown:	shutdown.scom
MBS command:	ps
DABC system path:	/misc/goofy/dabc/workspace/dabc
DABC user path:	/misc/goofy/dabc/work/mbs2
DABC setup file:	Combiner.xml
DABC script:	ps
MBS control file:	MbsControl.xml
DABC control file:	DabcControl.xml

Logger

Logging

```
Mar 11, 2009 10:46:04 AM |U| DABC/R3G-7/MSG/M: -R3-36  :transport  :Waiting for server ready
Mar 11, 2009 10:46:04 AM |U| DABC/R3G-7/MSG/M: -R3-36  :transport  :waiting for client (port 6000)
Mar 11, 2009 10:46:06 AM |S| DABC/lxi009:0/Control/DoConfigure
Mar 11, 2009 10:46:06 AM |U| DABC/R3G-7/MSG/M: -R3G-7  :transport  :Client 140.181.85.43 connected
Mar 11, 2009 10:46:06 AM |U| DABC/R3G-7/MSG/M: -R3-36  :transport  :Client 140.181.85.43 connected
Mar 11, 2009 10:46:07 AM |S| DABC/lxi009:0/Control/DoEnable
Mar 11, 2009 10:47:36 AM |S| MBS: *::Start acquisition
Mar 11, 2009 10:47:36 AM |U| DABC/R3G-7/MSG/M: -R3G-7  :util       :start acquisition
Mar 11, 2009 10:47:36 AM |U| DABC/R3G-7/MSG/M: -R3G-7  :read_meb   :found trig type 14 == start acquisition
Mar 11, 2009 10:47:36 AM |U| DABC/R3G-7/MSG/M: -R3-36  :util       :this controller operates NOT with master trig
Mar 11, 2009 10:47:36 AM |U| DABC/R3G-7/MSG/M: -R3-36  :read_meb   :found trig type 14 == start acquisition
```

Infos

```
R3-36: Events:   11656449, MBytes:   1793, E/s:  26953, MB/s:   4.25
R3-36: Loaded setup: setup2.usf
R3-36: Dispatch Msg_log Util Read_meb Collector Transport Daq_rate
R3G-7: No file
R3G-7: Events:   11658524, MBytes:   1793, E/s:  26947, MB/s:   4.25
R3G-7: Loaded setup: setup1.usf
R3G-7: Prompt Msg_log Dispatch Util Read_meb Collector Transport Daq_rate
Current node: R3G-7
r3g-7,r3-36
```

RateMeters

Settings

R3-36:MSG DataRateKb 4250.0 (0–20000)	R3-36:MSG EvSizeRateB 161.5 (0–400)	R3-36:MSG EventRate 26953.0 (0–60000)	R3-36:MSG TriggerRate 0:38302 Time	R3G-7:MSG DataRateKb 4250.0 (0–20000)
R3G-7:MSG EvSizeRateB 161.5 (0–400)	R3G-7:MSG EventRate 26947.0 (0–60000)	R3G-7:MSG TriggerRate 0:38770 Time	lxi009:0:Control DataRateKb.Con 7783.8 (0–25000)	lxi009:0:Control EventRate.Comb 26927.6 (0–20000)

Histograms

Layout

DABC/R3-36/MSG/TrigCountHisInt=23312898 Log, Counts 0–17484673, Trigger# 0–15	DABC/R3-36/MSG/TrigRateHis Int=53904 Lin, Counts 0–40428, Trigger# 0–15
DABC/R3G-7/MSG/TrigCountHisInt=23317048 Lin, Counts 0–17487786, Trigger# 0–15	DABC/R3G-7/MSG/TrigRateHis Int=53894 Lin, Counts 0–40420, Trigger# 0–15

States

Layout

R3-36:Acquisition Running	R3-36:RunMode DABC connected	R3G-7:Acquisition Running
R3G-7:RunMode DABC connected	R3G-7:TriggerMode Master	lxi009:Control S:Running

DIM servers: DNS=lxg0523 lxi009:0 R3G-7:MSG R3-36:MSG R3G-7:PRM

DABC Controls

MbsLauncher

OK: MBS tasks ready

Name server:	lxg0523.gsi.de
User name:	goofy
Password [RET]:	
Master node:	x86g-4
Servers:	3
System path:	/daq/usr/goofy/mbswork/v51
User path:	v50/x86/newmbs
Script:	script/remote_exe.sc
Command:	m_rising v50/x86/newmbs . x86g-4 x86-7
Launch file:	MbsLaunch.xml

Commands

- MbsStream_serv
- MbsTo
- MbsTransport
  - CloseFile
  - ConnectRfio
  - DisableTcp

Command ConnectRfio, scope MBS

node (C , REQ) :

-diskserver

-archiveserver

Infos

```
X86-7: MsgLog
X86-7: Rate
X86-7: Rising
X86-7: Transport
X86-7: Util
X86-7: xxx0074.lmd size: 100 MB, filled: 97 MB  97% closed
X86-7: Events:  731659936, MBytes: 1463319, E/s:  1709, MB/s:  3.50
```

319, E/s: 1710, MB/s: 3.50

MbsMonitor

- X86-7:Acquisition Running
- X86-7:BuildingMode Immediate
- X86-7:EventBuilding Working
- X86-7:FileOpen W:File closed
- X86G-4:Acquisition Running
- X86G-4:BuildingMode Immediate
- X86G-4:EventBuilding Working

X86-7/MSG		
DataRateKb[KB/s]	3500,0	16000
EventRate[Ev/s]	1709,0	10000
FileFilled[%]	97,0	100
StreamRateKb[KB/s]	0,0	16000
StreamsFull[n]	0,0	1
X86G-4/MSG		
DataRateKb[KB/s]	3503,0	16000
EventRate[Ev/s]	1710,0	10000
StreamRateKb[KB/s]	0,0	16000
StreamsFull[n]	0,0	20

```
X86-7:Transport
X86-7:xxx0074.lmd size: 100 MB, filled: 97 MB  97% closed
X86-7:Events:  731659936, MBytes: 1463319, E/s:  1709, MB/s:  3.50
X86G-4:Transport
X86G-4:No file
X86G-4:Events:  731659744, MBytes: 1463319, E/s:  1710, MB/s:  3.5
Current node: X86G-4
X86-7,X86G-4
```

RateMeters

Layout

X86-7:MSG DataRateKb 3500,0 (0 – 16000)	X86-7:MSG EventRate 1709,0 (0 – 10000)	X86-7:MSG FileFilled 97,0 (0 – 100)
X86G-4:MSG DataRateKb (0:16000, Time)	X86G-4:MSG DataTrendKb 3503,0 (0 – 1935025)	X86G-4:MSG EventRate 1710,0 (0 – 10000)
X86G-4:MSG StreamRateKb 0,0 (0 – 16000)	X86G-4:MSG StreamsFull 0,0 (0 – 10)	

Parameters

ID	Node	Application	Parameter	Type	Current	Set value	Show
00128	X86G-4	MSG	Rising	info	Rising	-	✓
00129	X86G-4	MSG	Run	char		-	
00130	X86G-4	MSG	StreamKeep	int	0	-	
00131	X86G-4	MSG	StreamMbytes	int	0	-	
00132	X86G-4	MSG	StreamRateKb	rate	0.0	-	✓
00133	X86G-4	MSG	StreamScale	int	0	-	
00134	X86G-4	MSG	StreamSync	int	0	-	
00135	X86G-4	MSG	StreamTrendKb	rate	0.0	-	
00136	X86G-4	MSG	StreamsFull	rate	0.0	-	✓

DIM servers: DIS_DNS X86G-4:MSG X86-7:MSG X86G-4:PRM

Scaling of performance (Mainz)

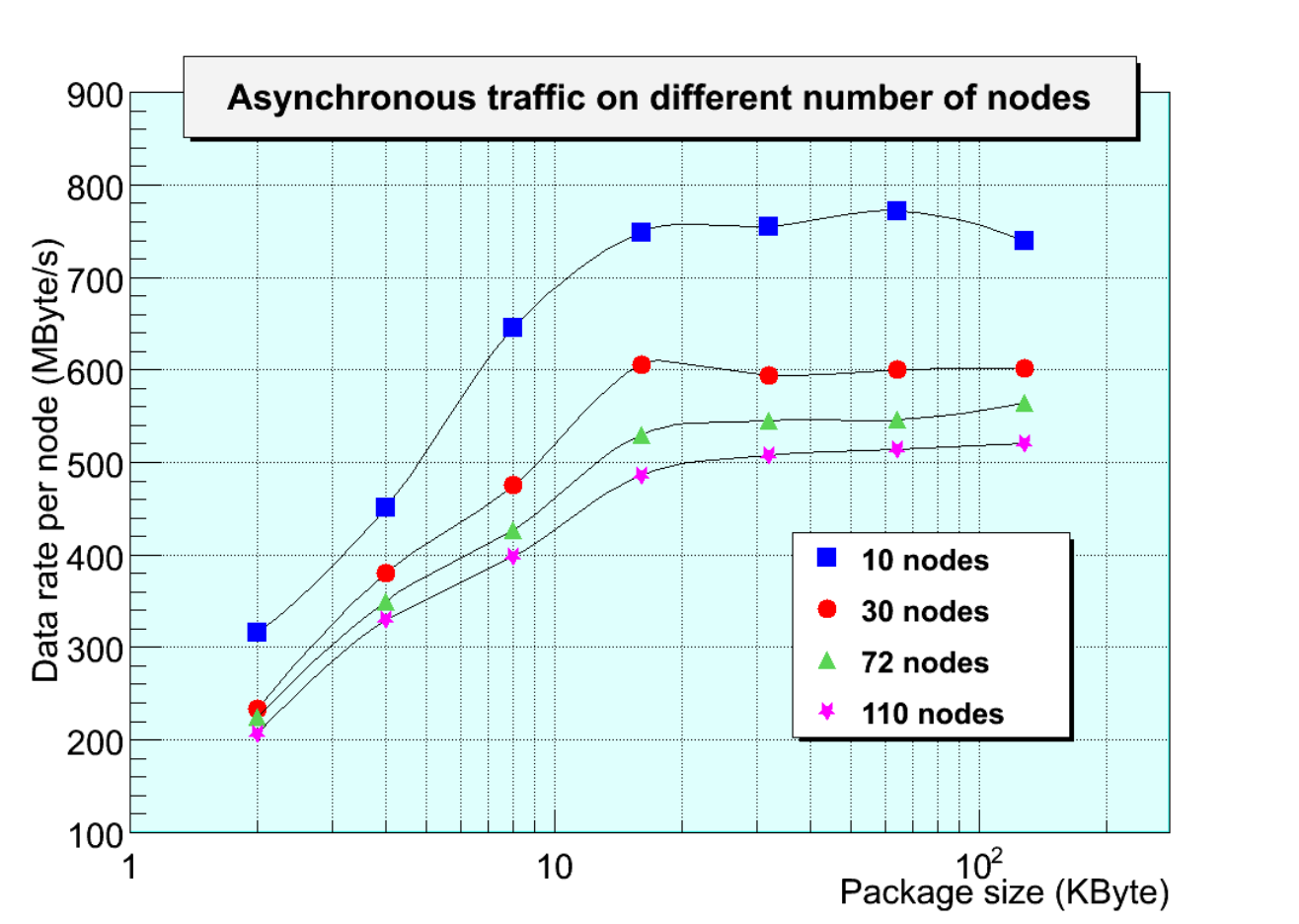

We thank Klaus Merle and Markus Tacke at the
Zentrum für Datenverarbeitung der Johannes Gutenberg Universität, Mainz,
for providing resources and support for the large-scale measurements.

Use case example: CBM test setup 2009

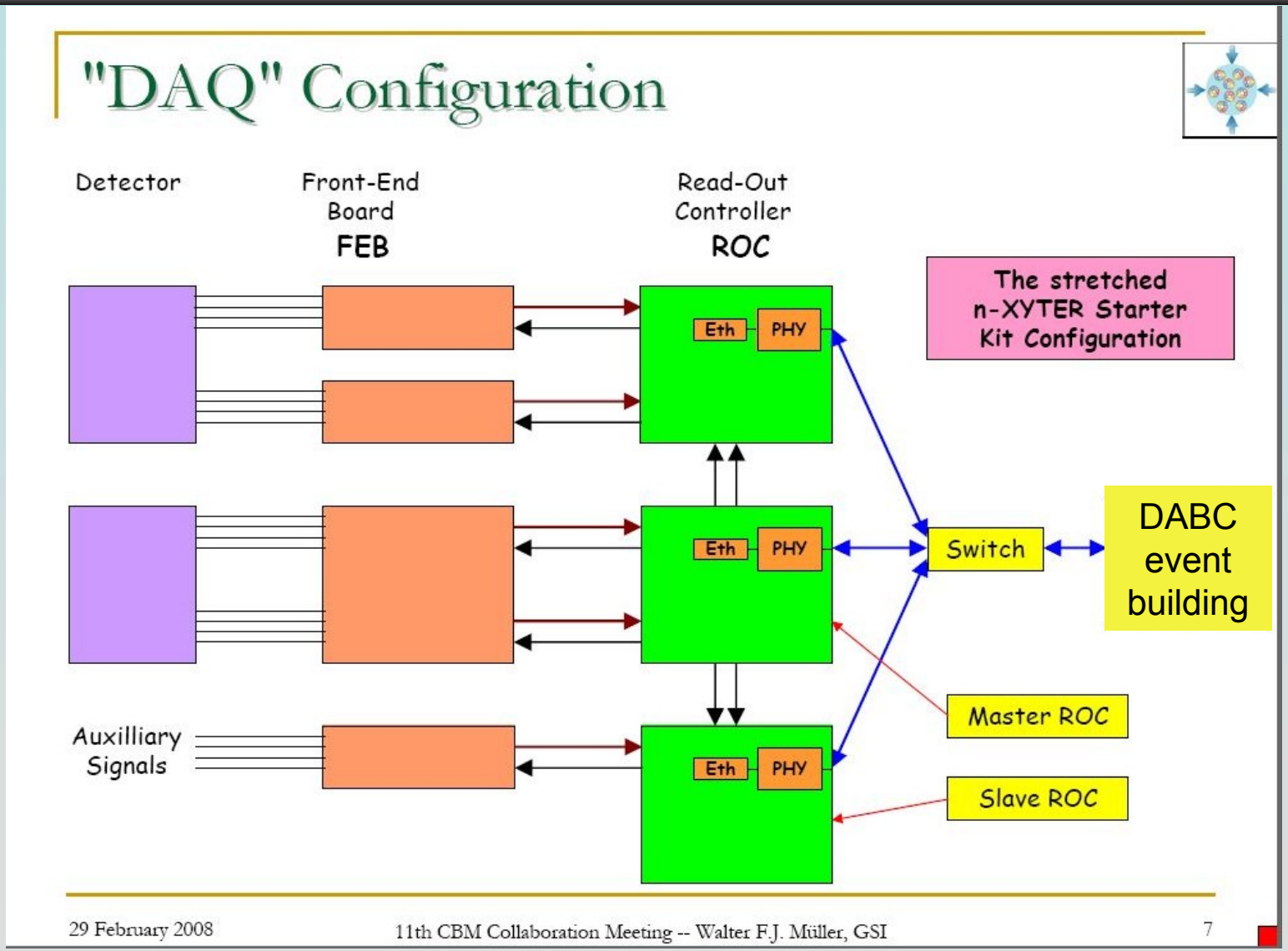

DABC as access layer to ROC

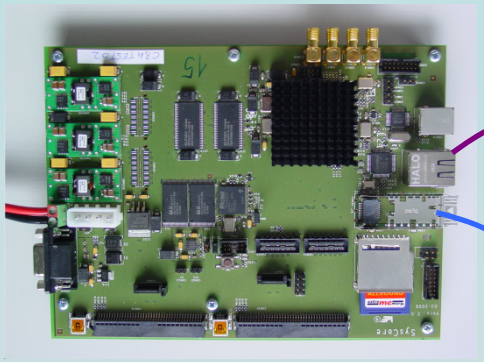

Ethernet

PC

ROC/udp plugin

DABC

User access layer

Users scripts, GUIs

ROC/PCIe plugin

file I/O
online monitor
Go4

optic

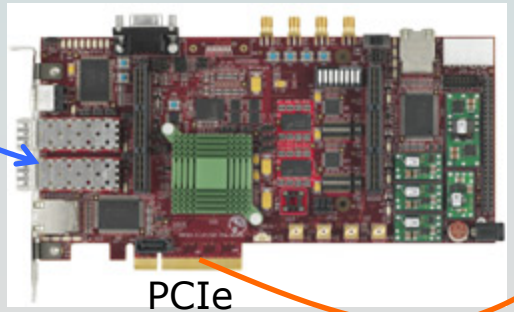

PCIe

CBM Beam Test @ GSI – 28.8.-8.9.2009

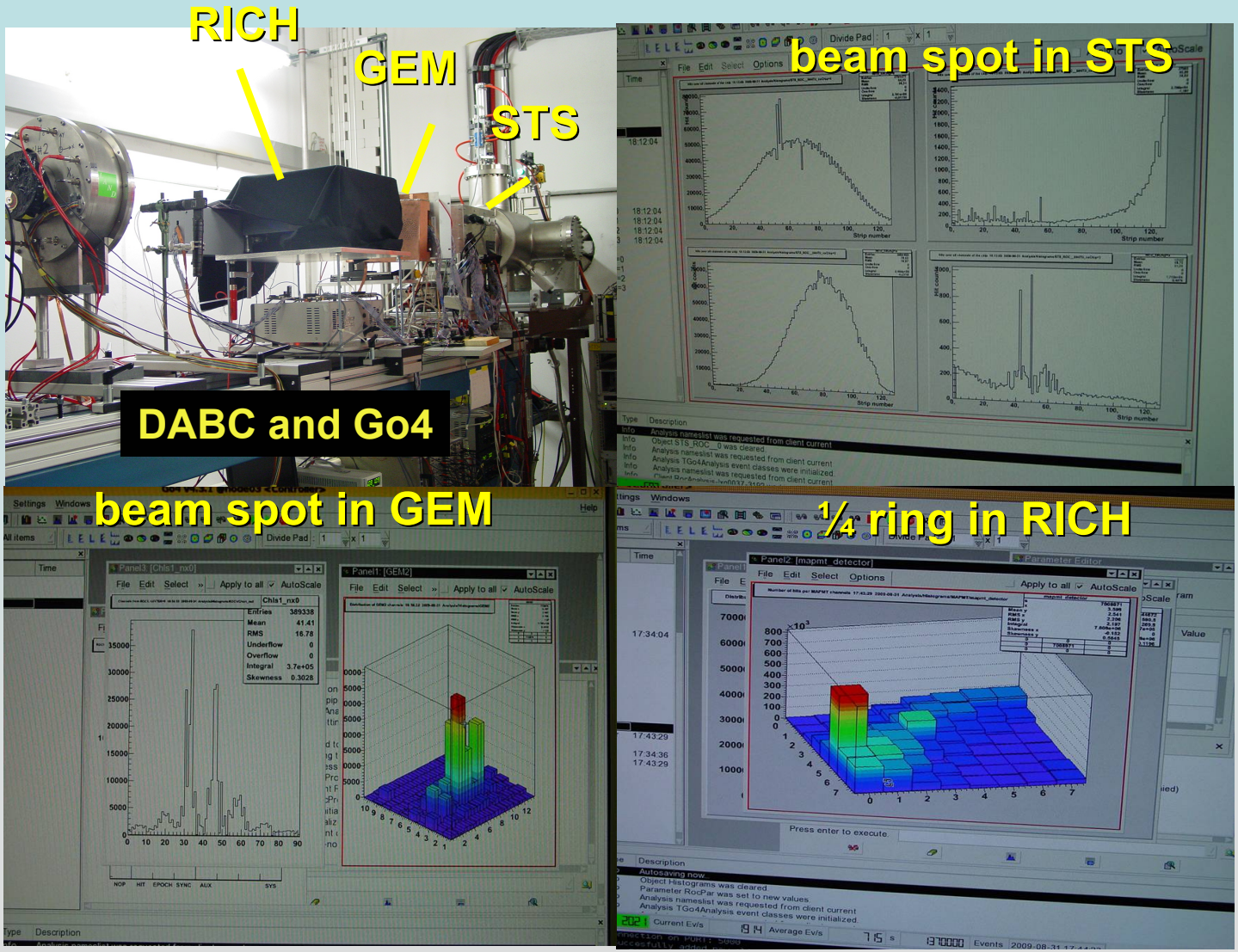

DABC development branches

From this, the following main applications of DABC are:

1. **High speed event building** over fast networks (tested on 110 nodes with Infiniband)
2. Front-end readout chain **tests** (CBM, September 2008/9)
3. DABC as **MBS event builder** (Ready, Demo)
4. DABC with mixed, triggered (MBS) and time stamped, data channels (future)
   - Needs Synchronization of between both
   - Insert event number from trigger to time stamped data stream
   - Read out time stamp from MBS via VME module (to be built)

Use case example: Frontend components test

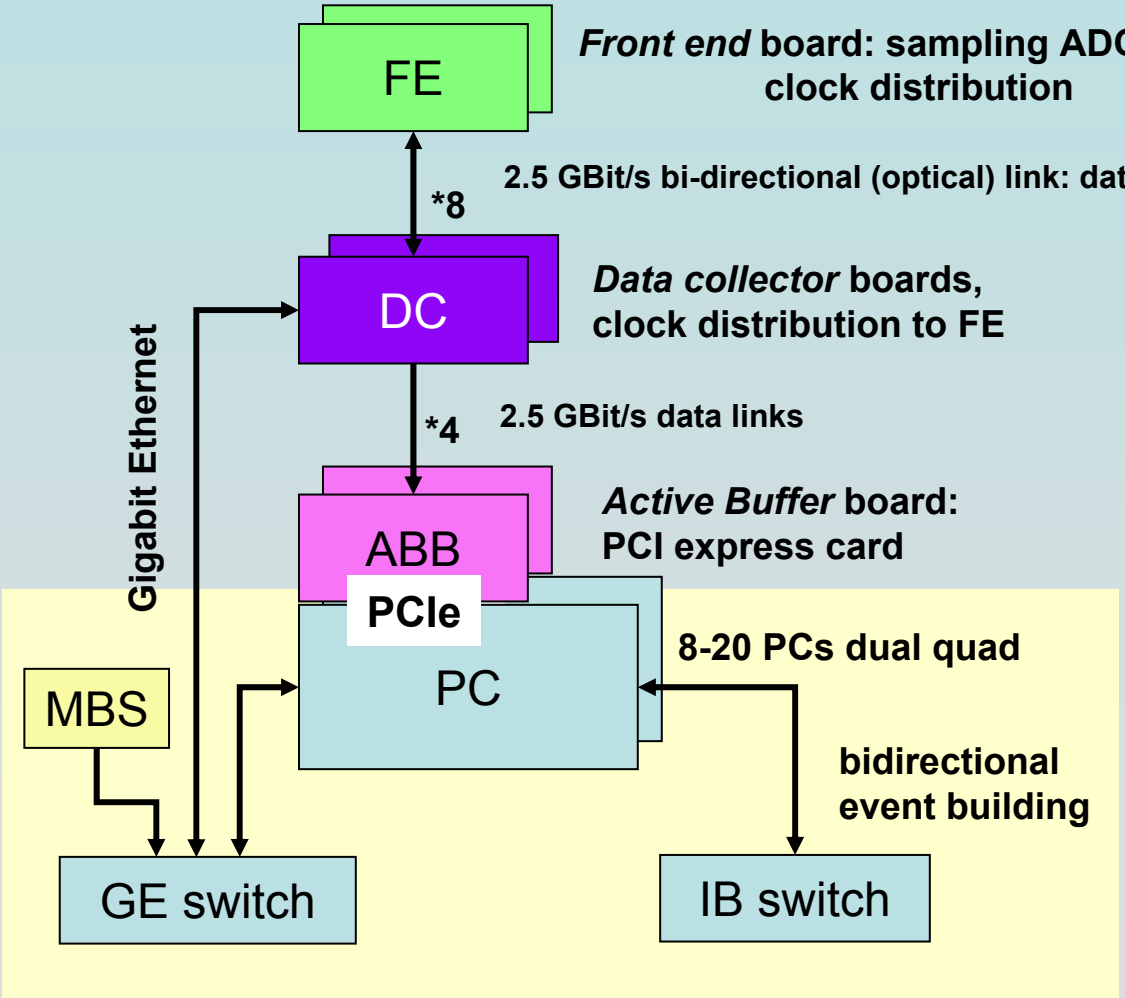

FE: Frontend board
DC: Data combiner board
ABB: Active Buffer board
GE: Gigabit Ethernet
IB: InfiniBand
MBS: MultiBranchSystem

The goal:
- Investigate critical technology
- Detector tests
- Replace existing DAQ

Scales up to 10k channels, 160 CPUs

DABC design: global overview

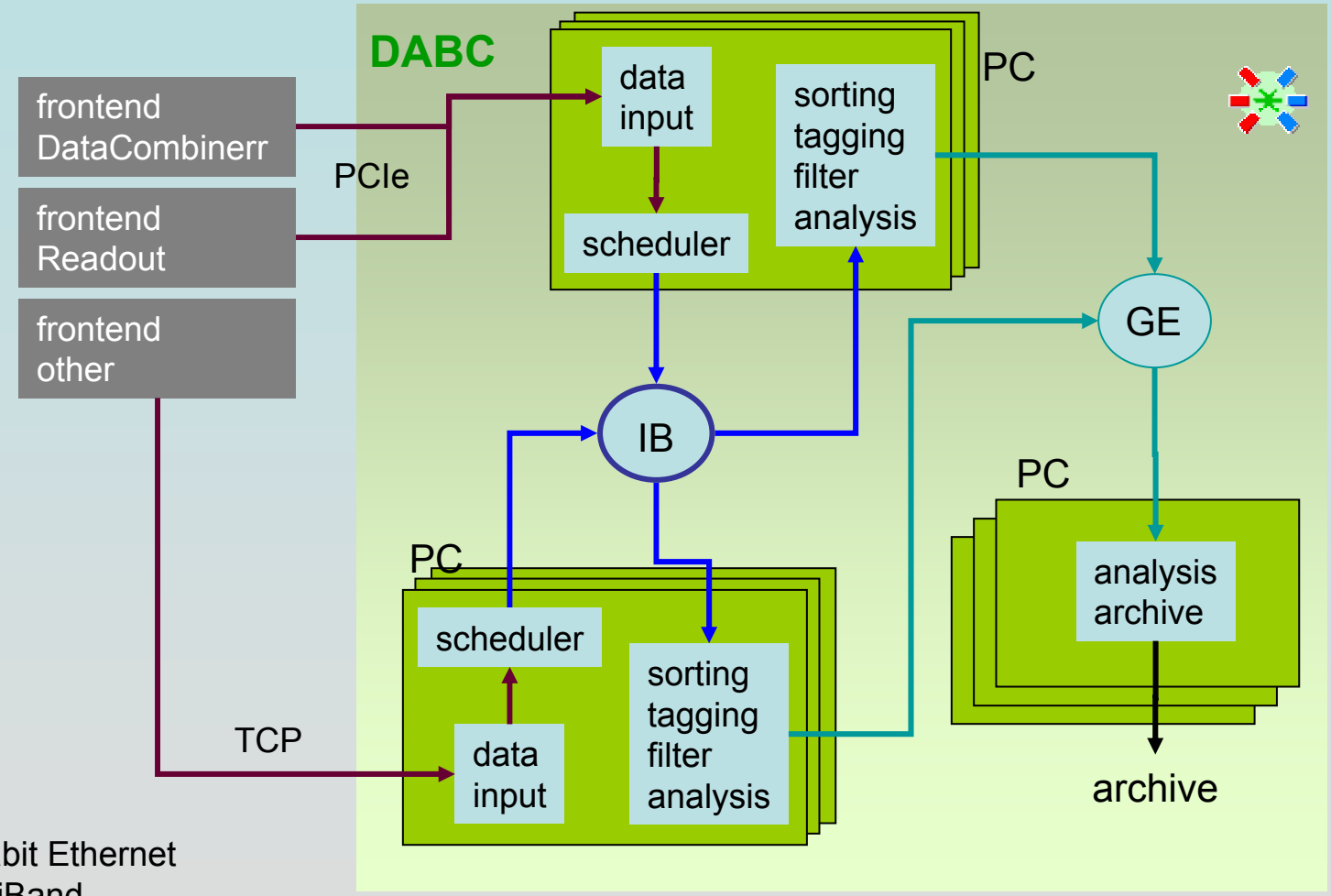

GE: Gigabit Ethernet
IB: InfiniBand

DABC Setup

- **Configuration via XML files**
- ***ApplicationPlugins* (entry point to application libraries)**
  - Call application factories
- **Application factory classes**
  - CreateDevice
  - CreateModule
  - Device->CreateTransport (Module->GetPort)
  - ConnectPorts (Module1->GetPort, Module2->GetPort)
  - CreateMemoryPool
- **State commands**
  - Startup
  - Initialize
  - Run / Stop
  - Hold / Resume
  - Shutdown

DABC: Commands and parameters

- **Commands**
  Objects with command description (XML) and *ProcessCommand* function.
  Name string: **/ server / node / application / type.thread.name**
  - server: DIM namespace
  - node: name:ID (port)
  - application: namespace::name:ID
  - type: DEV, MOD, POOL, PLUG
  - thread: name of module or device or...
  - name: command (description by related parameter record)
- **Parameters**
  Same name structure as above
- **Parameter records**
  Recognized by GUI, graphical presentation
  - Status
  - Rate
  - Histogram
  - Command description
  - and more

MBS Upgrade for DABC event builder

- **General upgrades**
  - ☑ Large buffers (up to now 32K limit) in MBS.
  - ☑ Large buffers in LMD files.
  - ☑ **MBS control via DIM**
- **DABC specific mode (DABC is event builder)**
  - ☑ **MBS transport in DABC mode blocks, if no DABC is connected**.
  - ☑ MBS transport sends variable sized buffers.
  - ☑ Using large buffers and one buffer per stream: no event spanning.
- **New LMD file format**
  - ☑ No buffer structure.
  - ☑ File header, data elements, index table (**random access**).
  - ☑ **No size limit (> 2 GB).**
  - ☑ Supported by event API.

DABC: Local event building for MBS

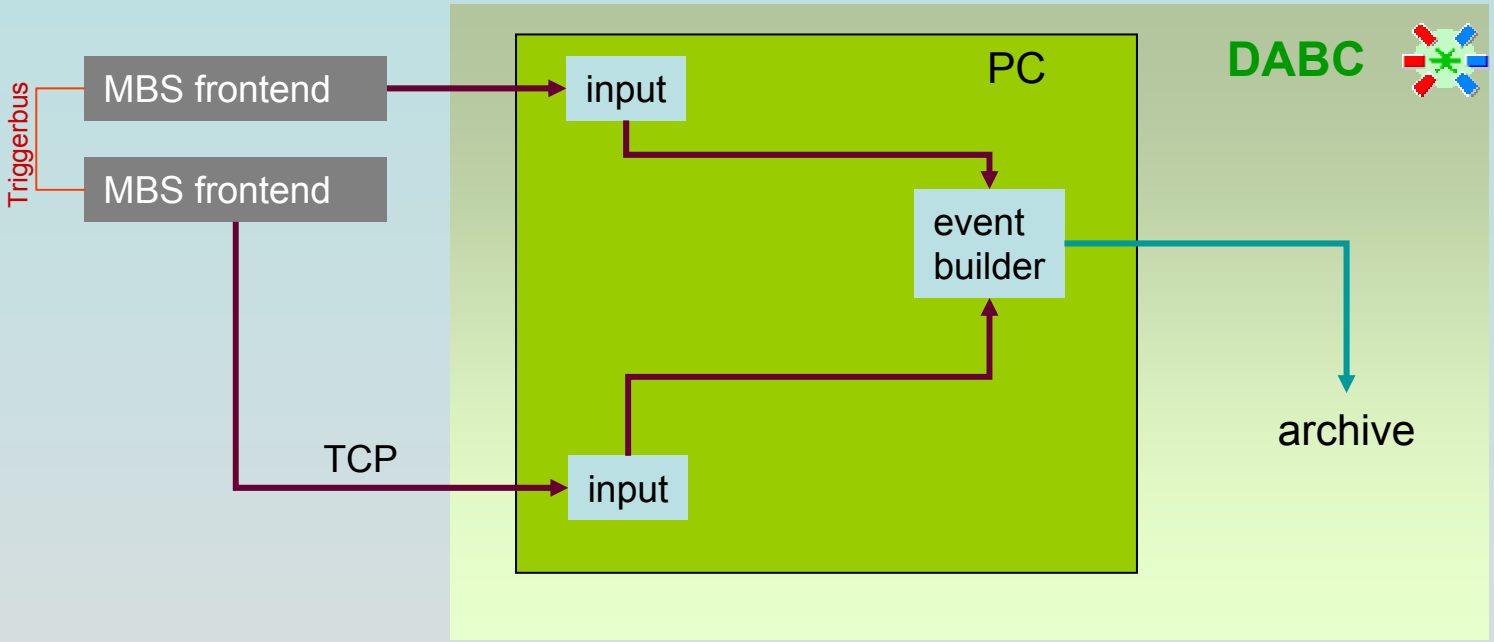

DABC: Local event building for MBS

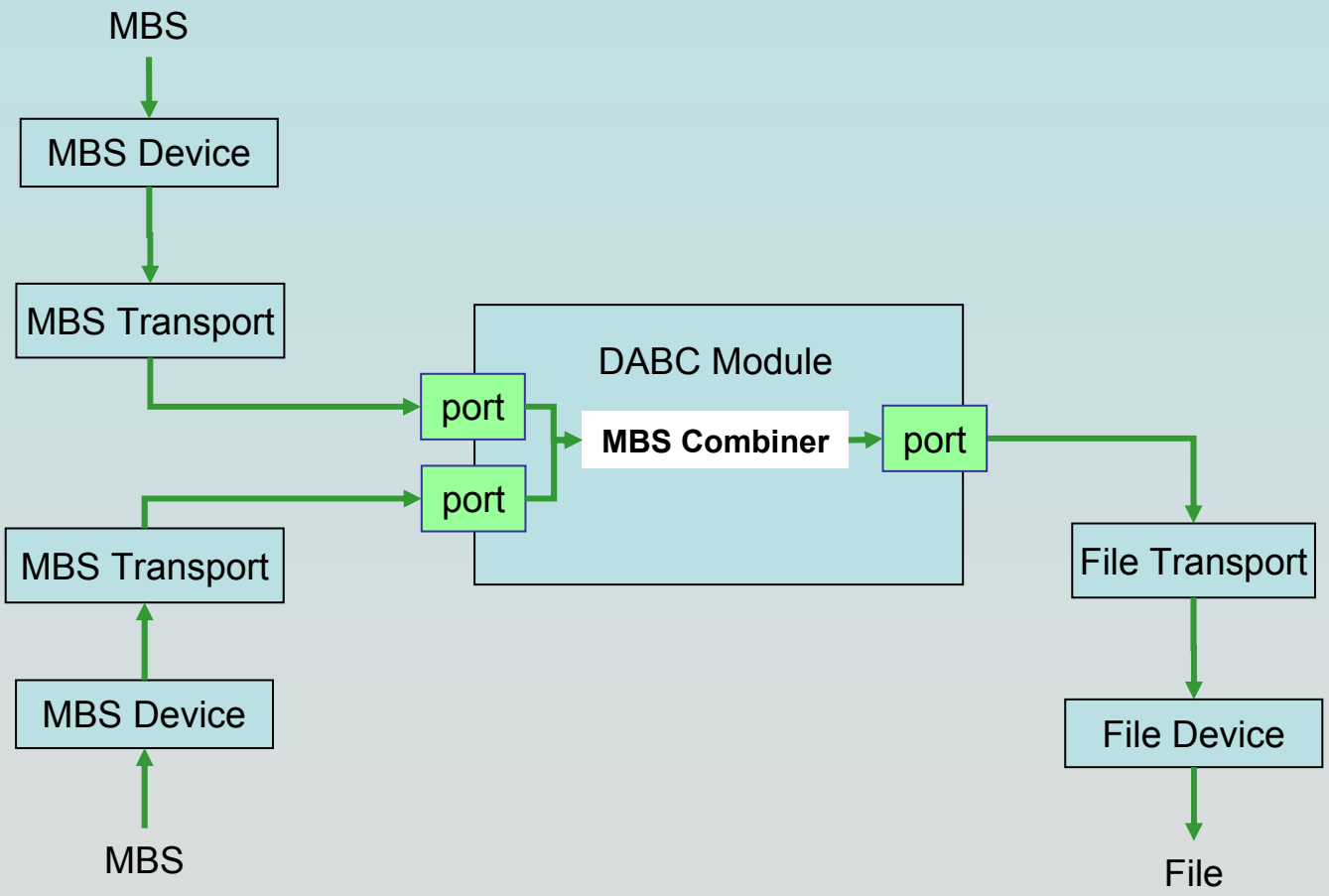

DABC: Network event building for MBS

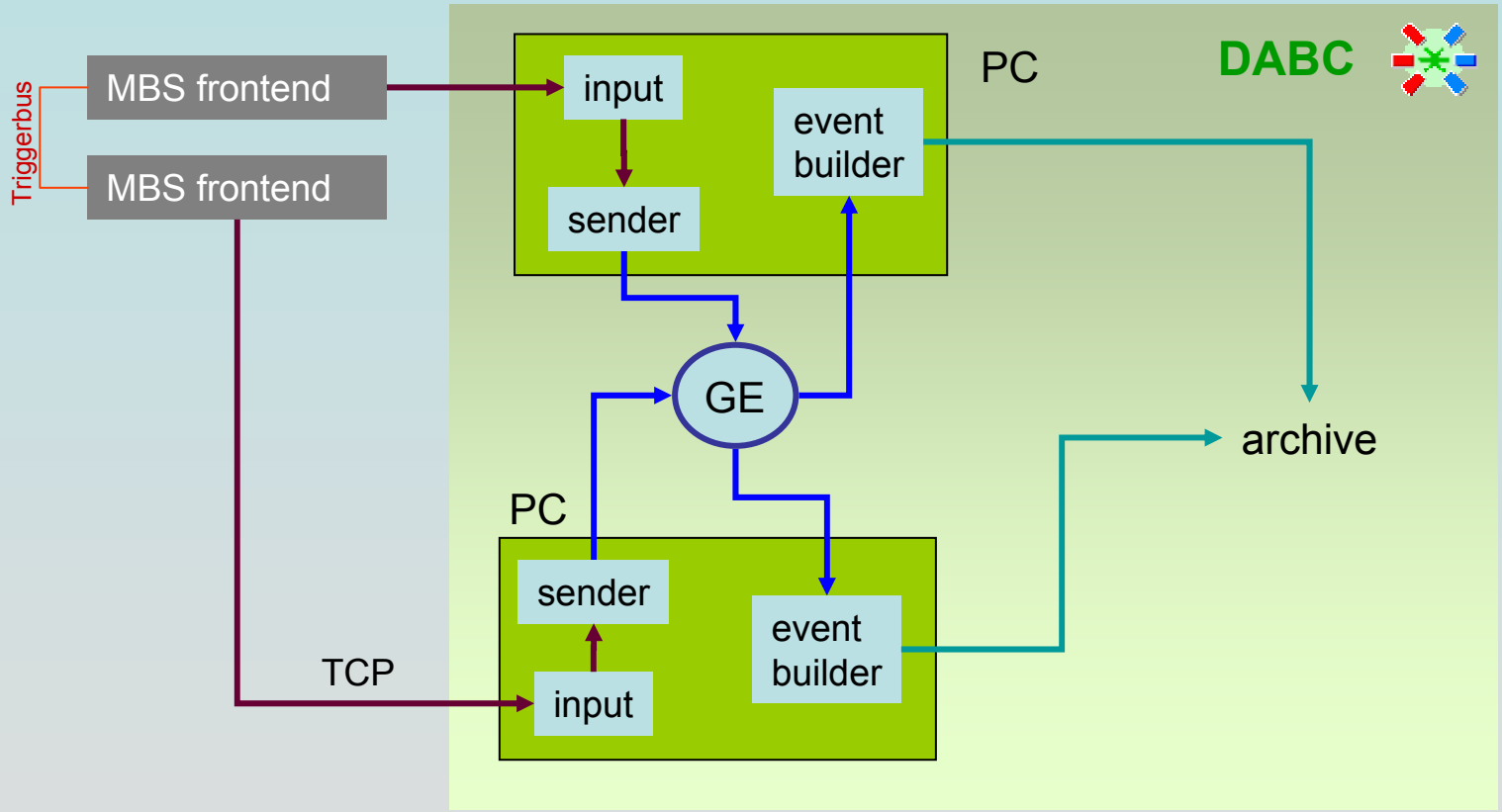

GE: Gigabit Ethernet

DABC: Network event building for MBS