HITRAP sections

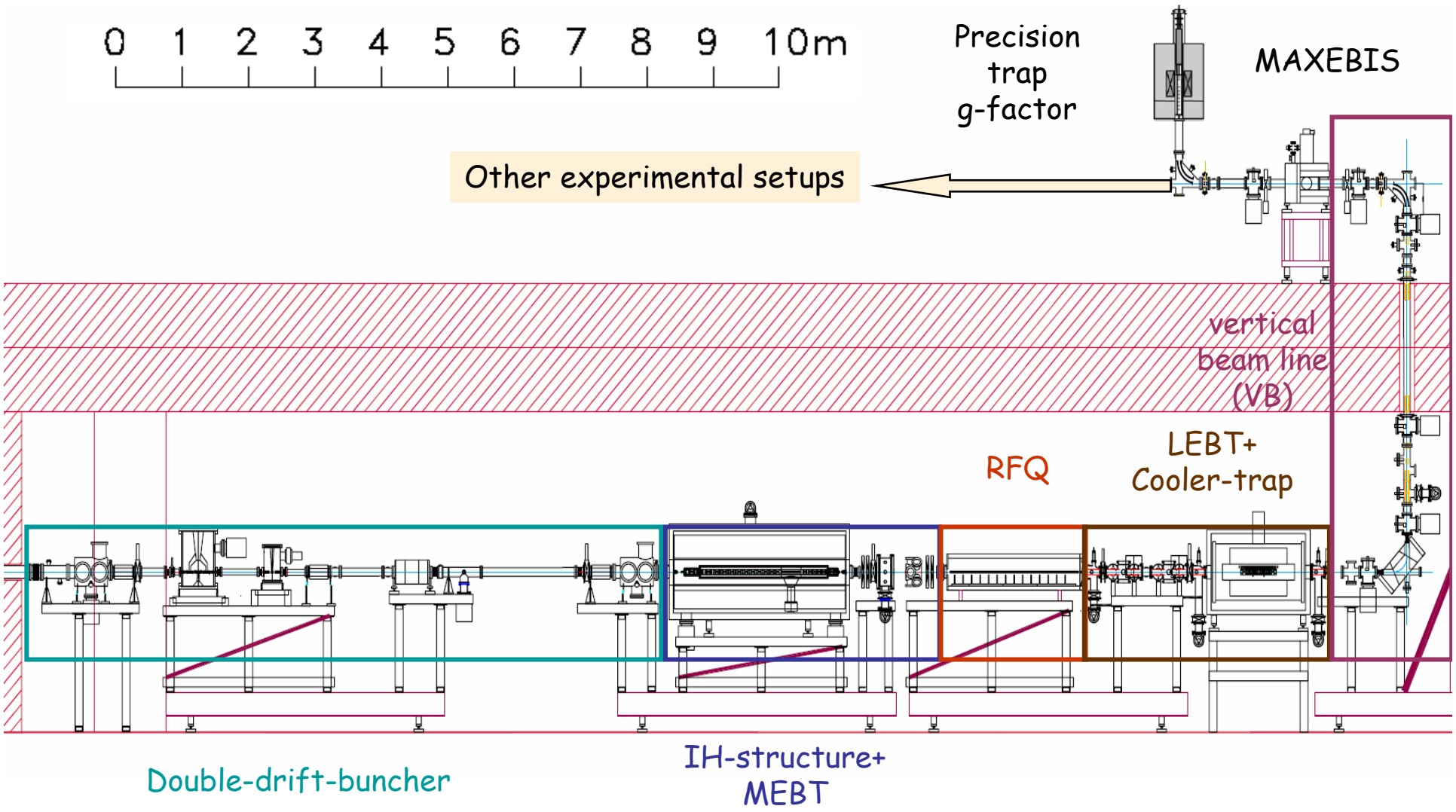

Systems to be controlled

- Power supplies (lenses, steerer, bender)
- Diagnostics (Cups, slits, MCPs)

  * Position , slits → stepper motors, encoders

  * Cups → Current amplifiers, charge integration

    (Pulse width 1 μs)

  * MCPs + phosphor screens →

    power supplies, digital cameras (external trigger)
- Vacuum system → Pumps, gauges, valves

  (instead of accelerator control system)

Low energy beam transport (LEBT)

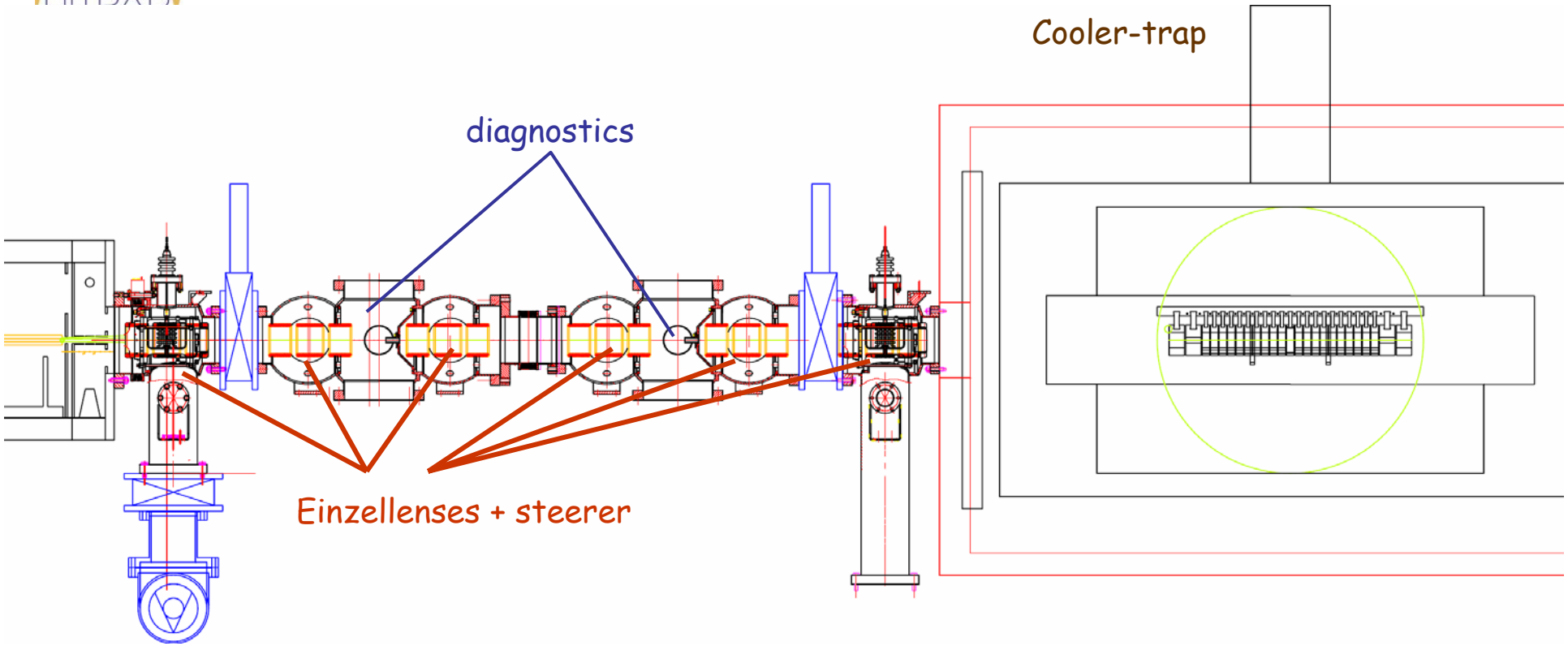

Voltages: 20-50 kV (lenses), max ±5kV (steerer)
Diagnostics: FC and MCP+P-screen

Vacuum control → Accelerator control system

Quadrupole lenses

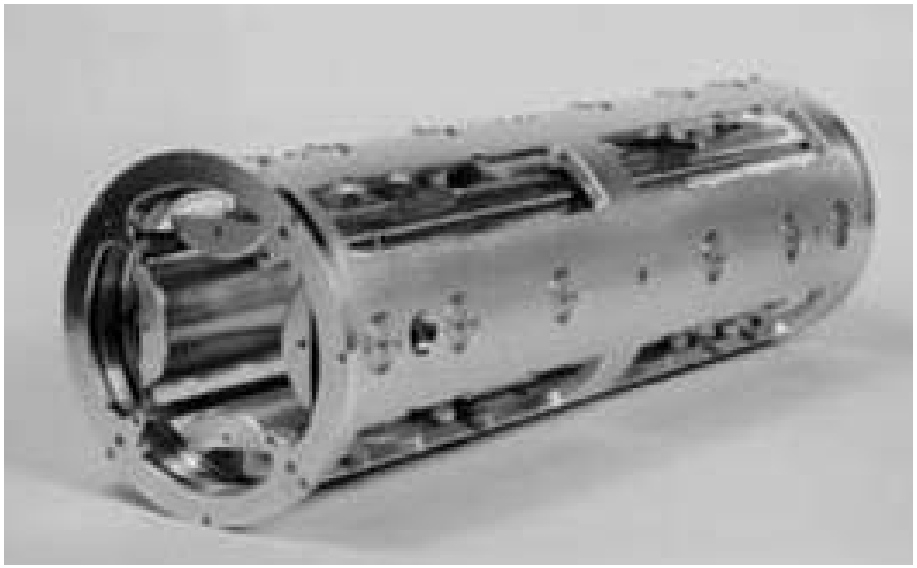

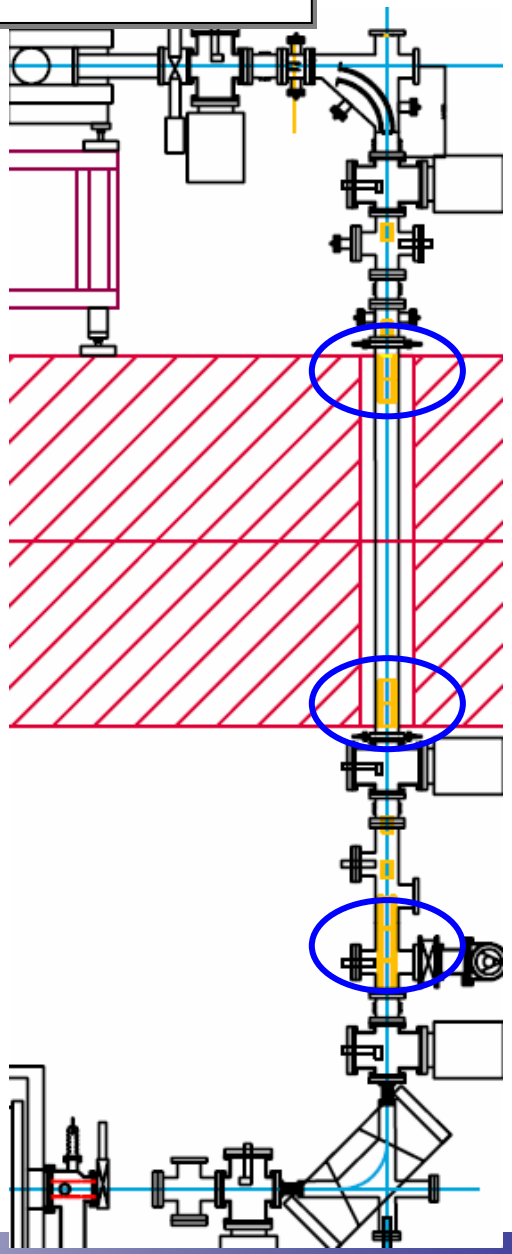

NEC Pelletron example:
Quadrupoles of the vertical beamline:
aperture: 40 mm, length 80 mm

max voltages: ± 2 kV

Bender

Bender of the vertical beamline:
magnetic bender, aperture = 25 mm,
R = 200 mm, I < 20 A
electrostatic bender, aperture = 40 mm,
R = 250 mm radius, V < 2kV

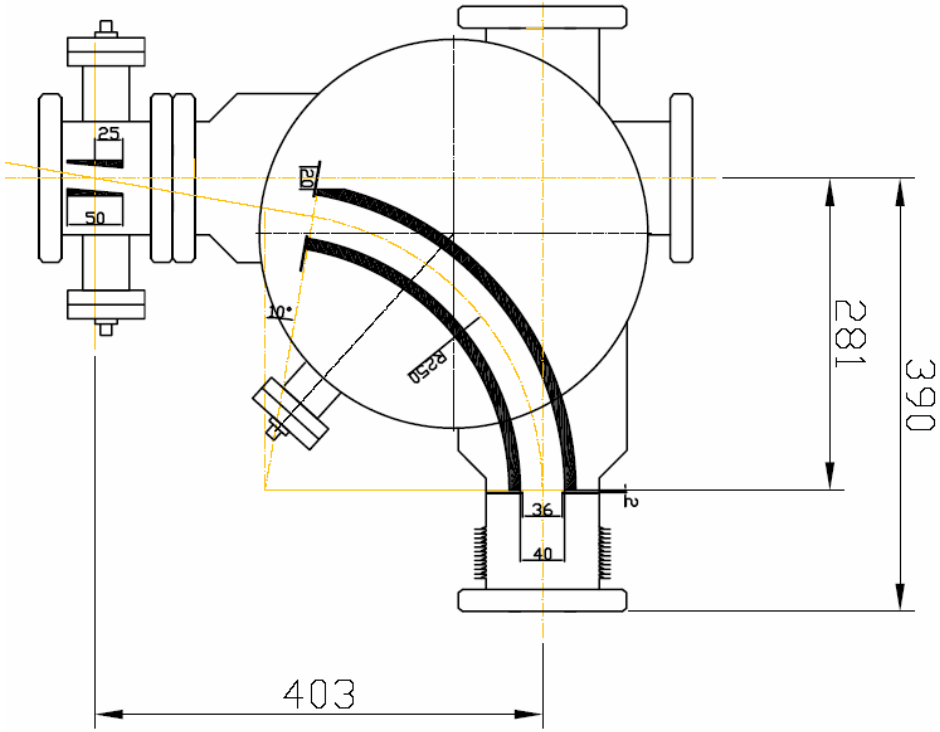

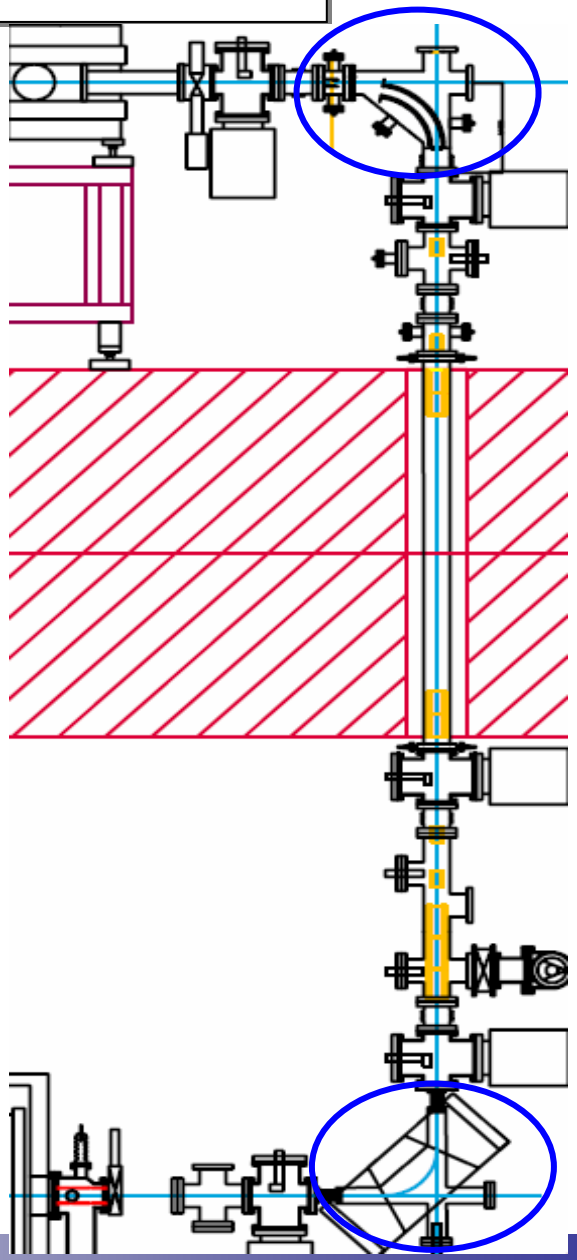

Power supplies

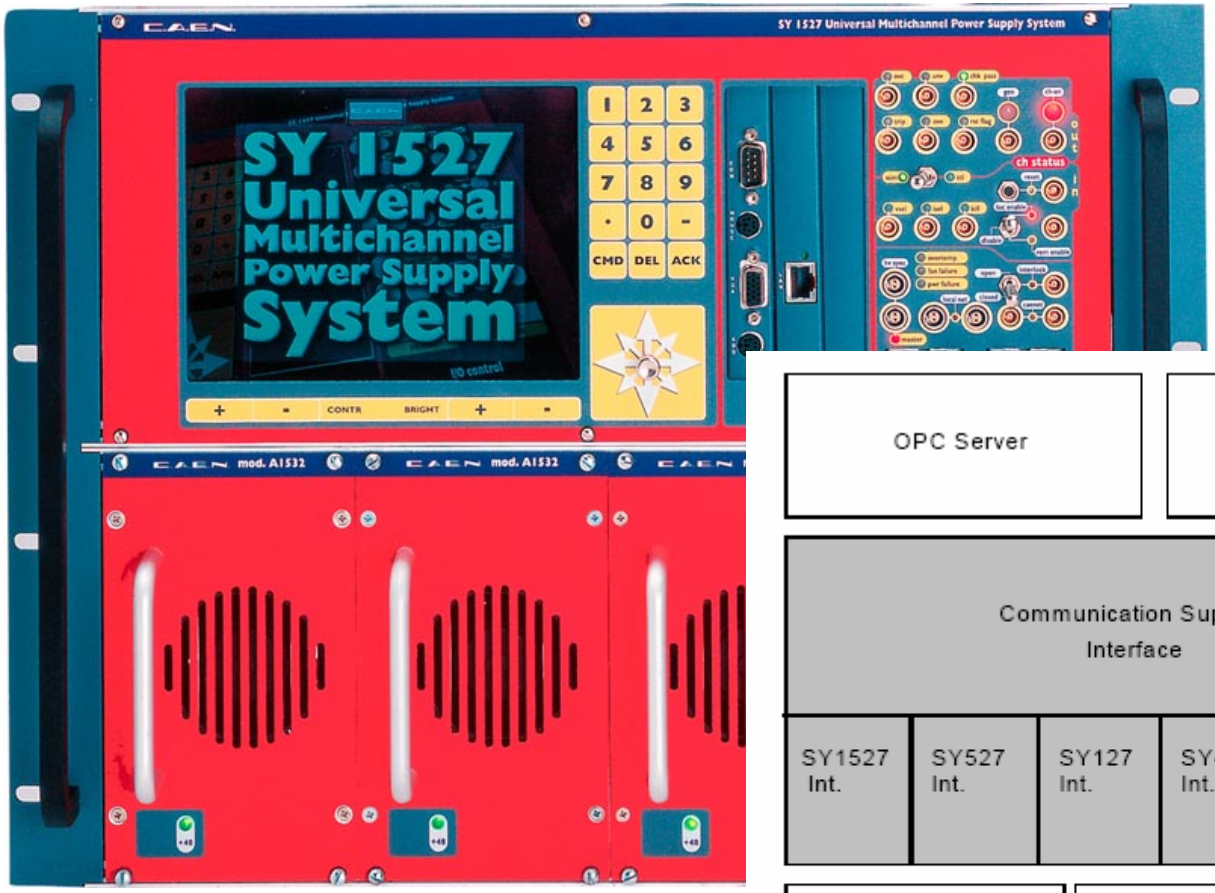

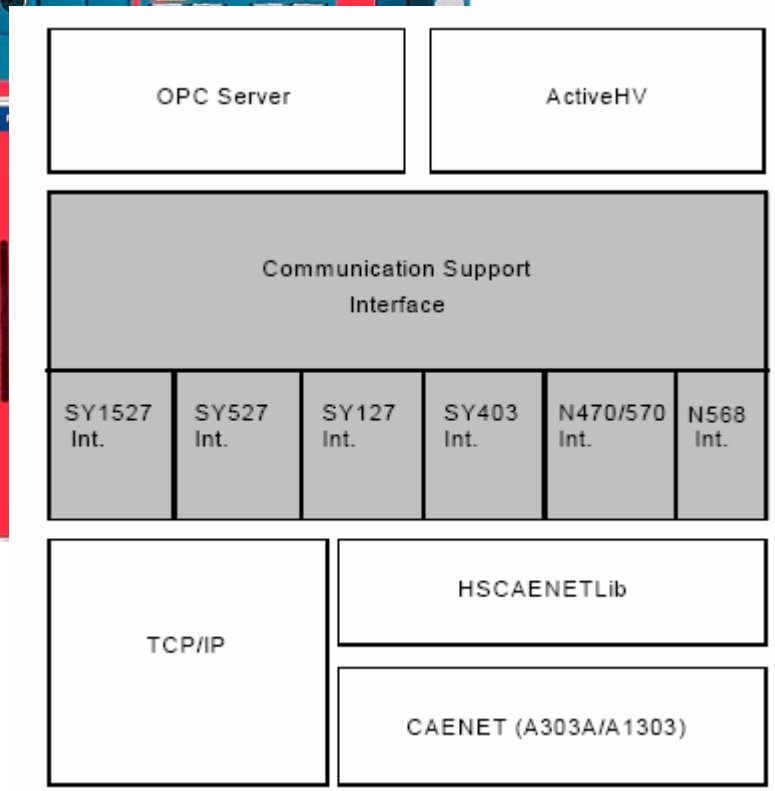

example:
CAEN multi channel system
Ethernet, RS232, CAENET

Diagnostics in the VB

- Faraday cup
- MCP with phosphor screen
- Digital camera
- Stepper motor

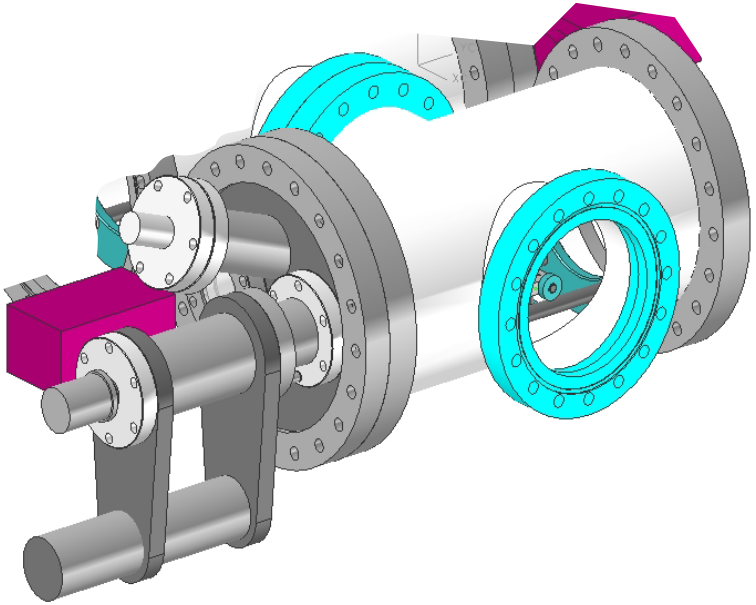

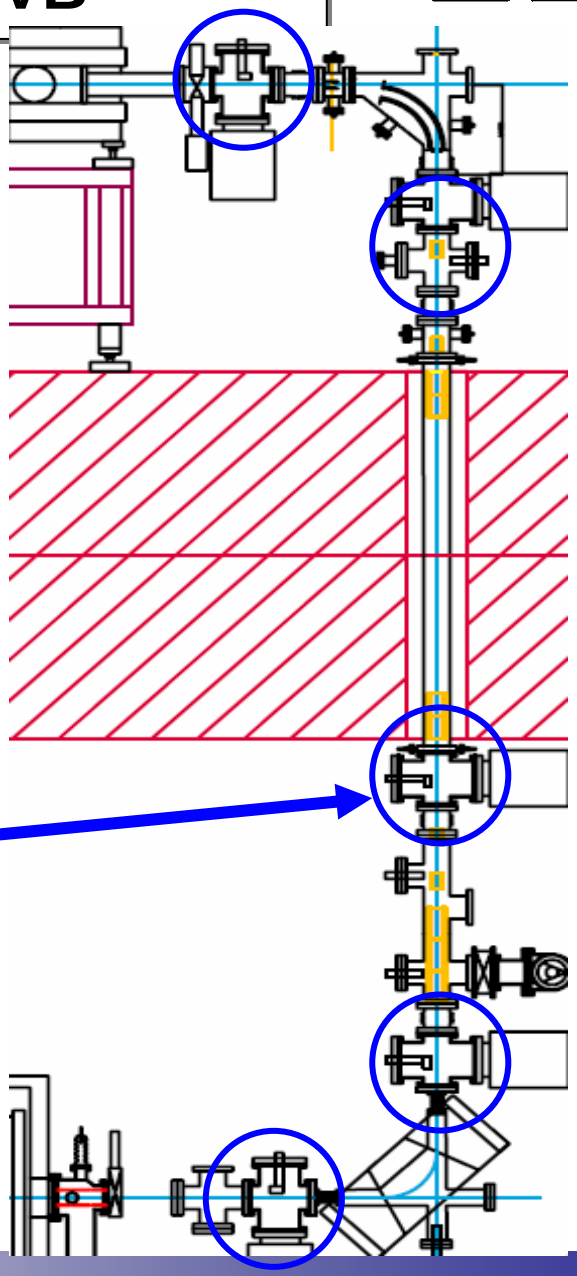

Diagnostic boxes (KVI Groningen)

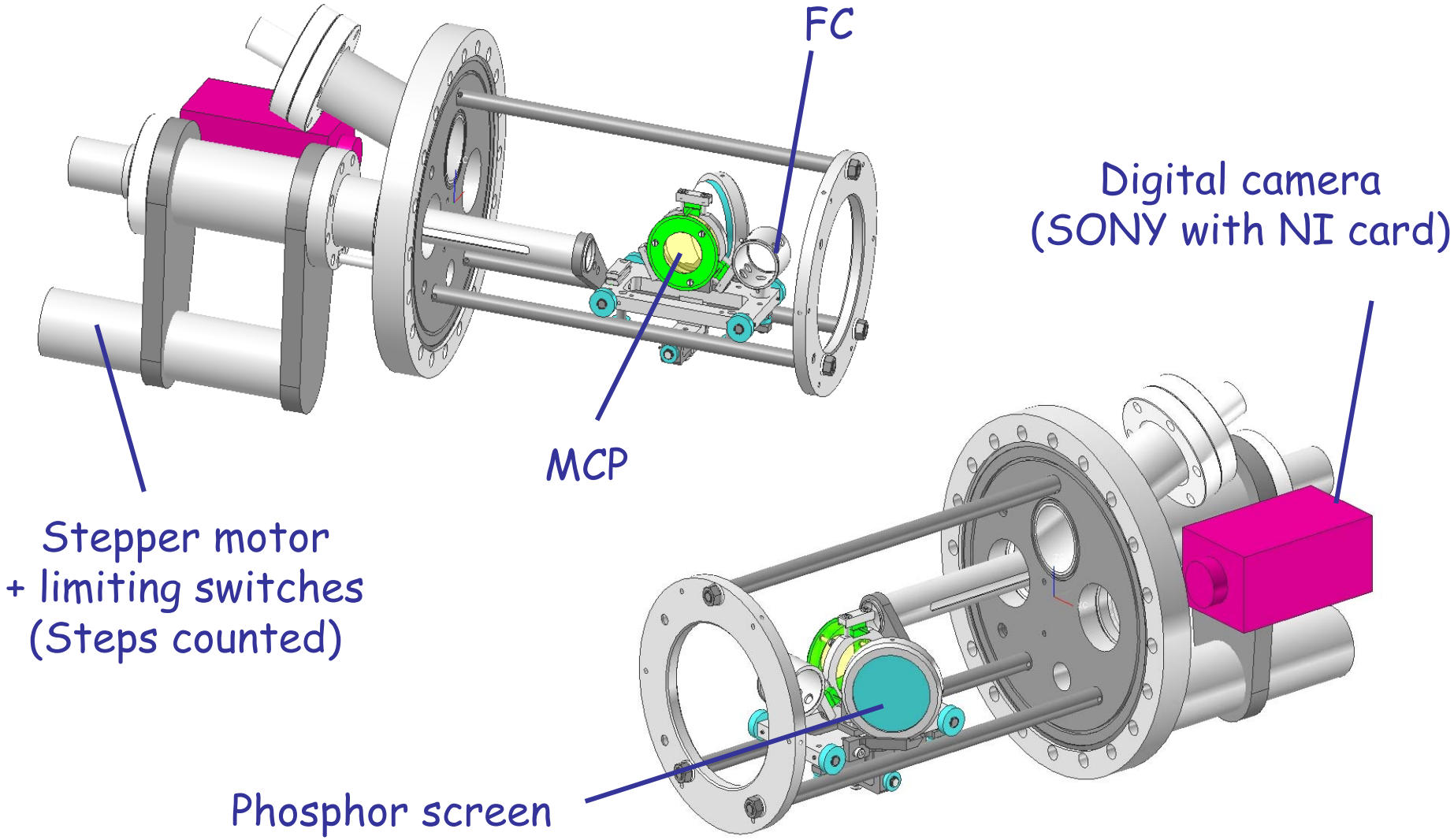

Diagnostics output

- Charge integration
- Time dependence of beam current

  shunt voltage or MCP signal
- Beam profile

  2-d plot, x- and y-profile (Gauss fit?, FWHM),

  intensity plot
- Position of diagnostics device (encoder, counting steps)

Beam lines towards the experiments

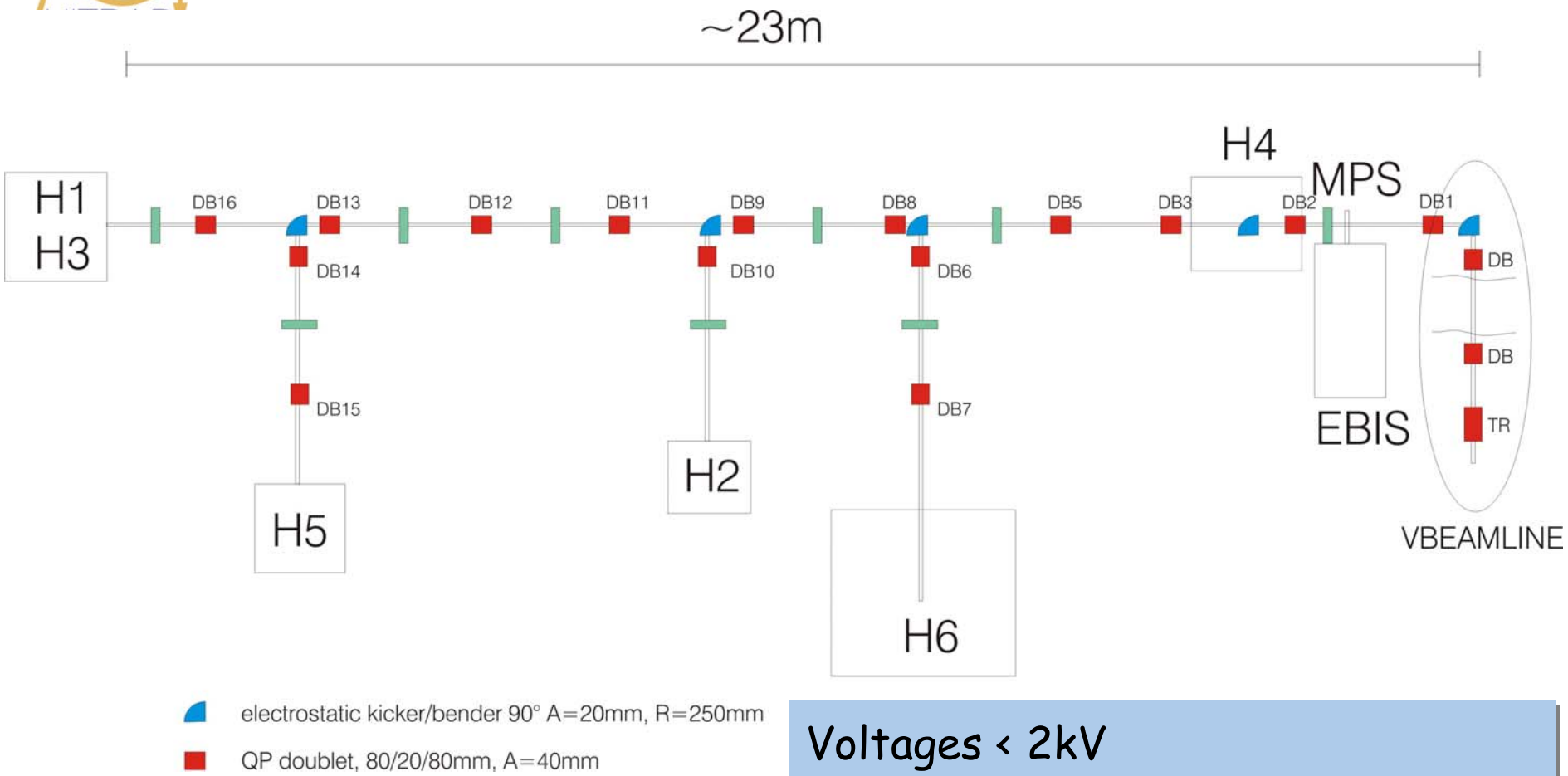

Voltages < 2kV
Diagnostics: FC and MCP+P-screen
Vacuum control → CS instead of Accelerator control system?